CECONITE

Aircraft Covering Process

# PROCEDURE MANUAL 101

By Jon Goldenbaum

CONSOLIDATED AIRCRAFT COATINGS

**Procedure Manual 101**
**STC SA4503NM**
**Instruction for**
**Continued Airworthiness**
**June 2008 Revision**
**Original Issue 1958**

# Revision Page

This manual is the June 2008 Revision.

This revision is printed and permanently bound with 132 pages. Pages are not replaceable; rather, the whole manual is revised and reprinted when required.

Major sections are:

Chapter 1 – Getting Ready: pages 1-7
Chapter 2 – Airframe Preparation: pages 9-12
Chapter 3 – Tune Up Your Iron: pages 13-14
Chapter 4 – Attaching the Fabric: pages 15-16
Chapter 5 – Let's Do a Wing: pages 17-49
Chapter 6 – Control Surfaces & Fuselage: pages 51-56
Chapter 7 – The Big Picture: How Many Coats?: pages 57-58
Chapter 8 – Spraying Nitrate: pages 59-62
Chapter 9 – Spraying Clear & Silver Butyrate: pages 63-66
Chapter 10 – Color Coats: pages 67-78
Appendix A: Envelopes & Sewing: pages 79-81
Appendix B: Covering Plywood Surfaces: pages 83
Appendix C: Rejuvenating Fabric: page 85
Appendix D: Dealing With Stains: page 87
Appendix E: Making Repairs: pages 89-90
Appendix F: Airworthiness Limitations: page 91
Appendix G: Inspecting Fabric and Coatings: pages 92-93
Appendix H: Product Profiles: pages 95-109
Charts, Tables, Forms: pages: pages 110-132

# Product Descriptions

Appendix H, Product Profiles, has a complete description of all PMA'd fabrics, tapes, and chemicals called for in the installation of this covering system.

Mixing instructions, shelf lives, and specific application instructions are covered in detail for each product.

We recommend that you refer to Appendix H, Product Profiles, to answer specific questions about products as you follow the installation instructions in the front text of the manual.

# PROCEDURE MANUAL 101

*for the*

# CECONITE

## Aircraft Covering Process

By Jon Goldenbaum

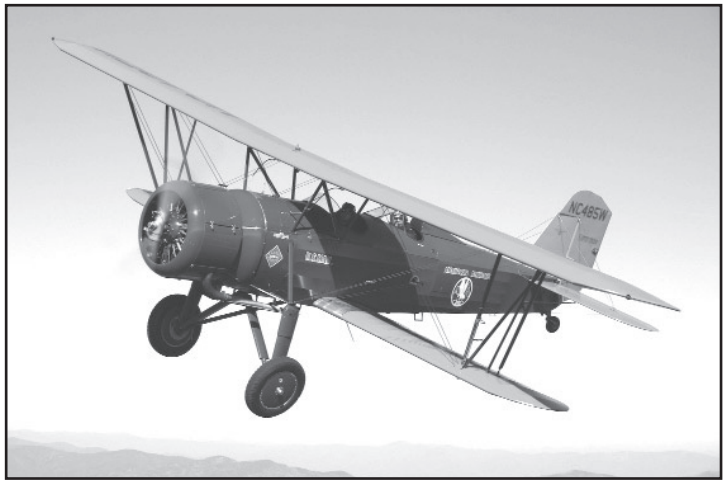

**Concept, design, and execution by**

FlatHat@comcast.net

Copyright © 2008
Consolidated Aircraft Coatings
Ceconite Division
P.O. Box 3129, Riverside, CA 92519-3129
951-684-4280 • Fax 951-684-0518
All rights reserved.
No part of this publication may be reproduced
in any form or by any means without permission.

# C O N T E N T S


**Chapter 1 – Getting Ready . . . . . .1**
The Goal of This Manual . . . . . .1
This Manual & 43.13-1B/2A . . . . . .1
The Ceconite System . . . . . .1
Certified Aircraft and STCs . . . . . .1
The Ceconite STC Number . . . . . .1
The Basic Rules: . . . . . .1
Amateur-Built Aircraft . . . . . .2
The Fabric to Use . . . . . .2
Health Issues . . . . . .3
Protect Your Skin! . . . . . .3
Protect Your Lungs & Body! . . . . . .3
Protect Your Eyes! . . . . . .3
Fire Prevention . . . . . .3
Work in a Well-Ventilated Area . . . . . .3
A Practical Work Area . . . . . .4
Tools You'll Need . . . . . .5
Let's Start With an Ideal List . . . . . .5
Fuselage Holding & Turning Jig . . . . . .5
About Spray Guns . . . . . .6
Materials You'll Need . . . . . .6
Other Things You Should Know . . . . . .7
Tautening vs. Non-Tautening Dope . . . . . .7

**Chapter 2 – Airframe Preparation . . . . .9**
Removing Old Fabric . . . . . .9
Take Your Time . . . . . .9
Epoxy – The Right Stuff . . . . . .9
Wood Surfaces . . . . . .9
Steel Tubing . . . . . .9
Fiberglass . . . . . .10
Aluminum . . . . . .10
Old Aluminum . . . . . .10
New Aluminum . . . . . .10
Dealing with Dents and Imperfections . . . . .11
Replace Badly Damaged Areas . . . . . .11
Fill with Poly-Fiber's **SuperFil** . . . . . .11
Inter-Rib Bracing . . . . . .11
Anti-Chafe Tape . . . . . .12

**Chapter 3 – Tune Up Your Iron! . . . . . .13**
Heat Guns? No! . . . . . .13
The Right Iron . . . . . .13
Avoid Any Iron With an Automatic Shutoff! .13
Why Calibrating Your Iron is So Important .13
How to Calibrate Your Iron Correctly . . . . . .14

**Chapter 4 – Attaching the Fabric . . . .15**
Cemented Seams . . . . . .15
Approved Cements . . . . . .15
The Cementing Process . . . . . .16

**Chapter 5 – Let's Do a Wing! . . . . . .17**
Basically, the Steps Are... . . . . .17
Handy Sawhorses . . . . . .17
Covering the Wing, Step by Step . . . . . .17
First, the Leading Edge . . . . . .18
Scallops . . . . . .18
How Tight Should That Fabric Be? . . . . . .19
Uh Oh... Protrusions! . . . . . .20
Next, the Trailing Edge . . . . . .20
Now for the Butt Rib . . . . . .20
Aileron & Flap Recesses . . . . . .20
The Curved Wing Tip Bows . . . . . .20
Now for the Top Fabric . . . . . .23
Before You Start Ironing... . . . . .23
Heat Tightening . . . . . .24
Make Sure the Iron is Set to 250° . . . . . .24
Protrusions . . . . . .24
1st Coat of **Rand-O-Proof** . . . . . .25
Rib Lacing . . . . . .25
How Far Between the Laces? . . . . . .27
Using the Chart . . . . . .27
Marking Rib Lace Locations . . . . . .28
The Magic Template . . . . . .29
Reinforcing Tape . . . . . .30
Let's Tie Some Knots! . . . . . .31
Other Mechanical Attachments: . . . . . .39
Pop Rivets . . . . . .39
PK Screws . . . . . .39
Fabric Clips . . . . . .39
Finishing Up . . . . . .39
Inspection Hole Reinforcements . . . . . .40
Finishing Tapes and Gussets . . . . . .41
Kinds of Tapes . . . . . .41
Let's Tape! . . . . . .42
The Three Basic Steps in Taping: . . . . . .42
Fabric Gussets . . . . . .42

Chord-Wise Tapes .....43
One-piece Finishing Tape .....43
Two-piece Finishing Tape .....45
Span-Wise Tapes .....45
Bias Tapes .....46
Different Surfaces .....47
Aircraft with Big-Engine Modifications .....47
Sun Shrinking .....48
Drain Grommets .....48
Heat Smoothing .....49
Imperfections You Should Fix .....49
Some Other Tricks .....49

**Chapter 6 – Control Surfaces & Fuselage 51**
Ailerons .....51
Tail Feathers .....51
Let's Take It Step by Step .....51
Fuselage .....53
Option One: Blanket Method .....53
Sometimes You Have to Sew .....54
Option Two: Buy a Fuselage Envelope, or Make Your Own .....55
Final Steps! .....56

**Ch 7 – The Big Picture: How Many Coats? 57**
More Rules .....57
What Does All This Stuff Weigh? .....58

**Chapter 8 – Spraying Nitrate .....59**
Blush .....59
Low Solids, Multiple Coats .....60
Each Coat "Melts In" .....60
Two Coats a Day, Please .....60
Each Coat is Applied as a "Cross Coat" .....60
OK, Lets Spray! .....60
Fish Eye .....61
Should I Sand Yet? .....62

**Ch 9 – Spraying Clear & Silver Butyrate 63**
Now Spray Three Cross Coats of **Clear Butyrate** to Build Up the Film .....63
Sanding Fabric .....63
**Silver Rand-O-Fill** UV Protection .....64
Mix Your Own? .....64
Now Spray the First Two of Four Cross Coats of Silver **Rand-O-Fill**. Sand After the Second Cross Coat .65
Oh No! Pinholes! .....65
So How Do You Fix Pinholes? .....65
Now Sand the First Two Cross Coats of **Rand-O-Fill** .....65
OK, Now Spray the Second Two Cross Coats of **Rand-O-Fill**. .....66
Spot-sand Any Obvious Defects, Otherwise Leave It Alone. .....66
How Do You Know If You Have Enough Silver on There? .....66
Whatever Silver You Sand Off, You Have to Spray Back On! .....66

**Chapter 10 – Color Coats .....67**
Your Painting Expectations .....67
The Basics: Equipment, Cleanliness, and Mixing .67
Equipment .....68
Cleanliness .....68
Now the Question Is Where Are You Going to Paint? .....68
Mixing .....69
Gloss, Temperature, and Drying Time .....69
Thinners, Retarders, Accelerators, and Rejuvenators .....69
Thinners .....69
Retarders .....69
Accelerators .....70
Rejuvenators .....70
Do Not Use These Paints Over Fabric! .....70
Enamels .....70
Synthetic Enamel, Lacquer, or Epoxy Paint ...70
Automotive Polyurethanes or Polyurethanes Made for Metal or Fiberglass .....70
What About Flex Agents? .....71
Don't Use Clear Coats! .....71
What Paints Do We Recommend? .....72
**Colored Butyrate Dope** .....72
Before Spraying .....72
Thinner .....72
Shaking .....72
Filtering .....73
Spraying .....73
Under Yellow & Red **Colored Butyrate Dope** ..73
Want Glossier **Colored Butyrate Dope?** .....73
Polishing **Colored Butyrate Dope** .....73
Waxing .....74

Taping for Trim .....74
Painting the Metal Parts of a Fabric-covered Airplane .....74
**Mark II for Metal** .....74
Surface Preparation for **Mark II** .....74
Mixing and Thinning **Mark II** .....74
Taping and Trim .....75
Using **Ranthane** Over Fabric, Metal, and Fiberglass 75
Lung Protection .....76
Before You Spray .....76
Spraying Yellow or Red .....76
Shake Well .....76
Straining .....77
Adding Catalyst .....77
Thinning and Spraying .....77
Common Ranthane Errors .....77
Fixing Problems .....78
The Respray Time Window .....78
Taping for Trim .....78
Matching Gloss .....78

**Appendix A: Envelopes & Sewing .....79**
Envelopes .....79
To Install an Envelope: .....79
Envelope Pros and Cons .....79
Sewing .....80
Hand-Sewn Seams .....80
Machine-Sewn Seams .....80
Make Your Own Envelope! .....81

**Appendix B: Covering Plywood Surfaces .83**
Prepare the Surface .....83
Varnish .....83
Pre-Coat With **Rand-O-Proof** .....83
Apply Fabric .....83
Heat Shrink .....83
**Rand-O-Proof** .....83
Tape and Spray Clear and Silver Dope .....83

**Appendix C: Rejuvenating Fabric .....85**
What Rejuvenation Does .....85
What Rejuvenation Doesn't Do .....85
The Steps .....85

**Appendix D: Dealing With Stains .....87**
To Remove Stains .....87

**Appendix E: Making Repairs .....89**
The Rules Are Simple .....89
Repairing **Colored Butyrate Dope** .....89
Major Repairs .....90
Repairing **Ranthane** .....90

**Appendix F: Airworthiness Limitations 91**

**Appendix G: Inspecting Fabric & Coatings ..92**
Inspection Procedures .....92
The Problem Scenarios .....92
The "Hang It On the Wall" Test .....93

**Appendix H: Product Profiles .....95**

**Charts, Tables, Forms .....110**
The Ceconite STC .....110
The Ceconite PMA .....111
The Ceconite Installation Report .....112
The Ceconite Approved Model List .....113
Ceconite Covering Material Estimates .....127

# Notes

# A Better Manual

We've all been frustrated by instruction manuals that don't instruct, so we tried very hard to create one that instructs, inspires, and entertains.

Throughout this manual you'll see some special little sections that stand apart from the main text. They will look like these:

Whenever there's an important point that needs to be discussed before going on with the job, we'll pause and take a **Coffee Break...** →

### How Tight Should That Fabric Be?

Let's talk about how tightly you should be attaching the fabric. How taut you pull the fabric as you... etc etc.

Whenever we need to make a short point of information during the project, you'll see this **Note...** →

This means, "Take notice of this!"

**The only authorized heat source for accurate control of the temperature transferred to fabric is a CALIBRATED CLOTHING IRON. Period.**

If there's a point that's really important or that deals with basic safety, you'll see one of these **Warnings...** →

It means, "Read and heed, Jim! This is MAJOR important!"

**NEVER APPLY AN IRON HOTTER THAN 250° TO A CEMENTED AREA. DOING SO COULD RELEASE THE SEAM OR THE BOND!**

## Meet Cyrus...

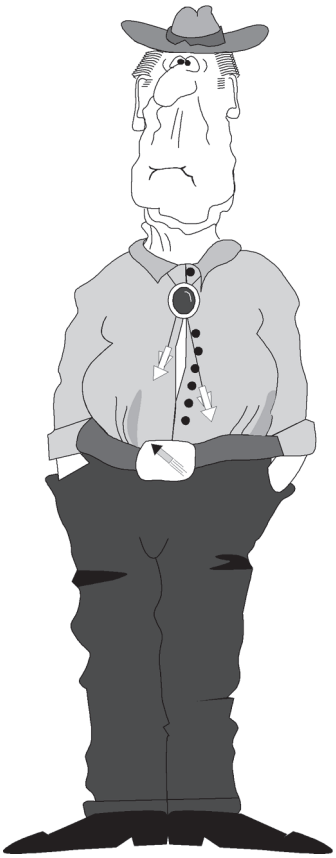

You know Cyrus. He lives someplace out near the airport, and he likes to come around and share his wisdom about covering tube and fabric airplanes. He does this with the greatest of ease, because he's an expert. Just ask him!

There's a Cyrus at just about every small airport. Why, he's been covering airplanes for *years*, and he knows all there is to know about it. He'll show you his own secret recipes and shortcuts. Shucks, it was good enough for Wilbur and Orville, and that gangly kid from Minnesota… I guess it's good enough for you. Right?

## Wrong!

**You MUST follow the Basic Rules to the letter!** Maybe Cyrus used to use his old blowtorch to tighten up his fabric, or maybe he liked to add a little castor oil to his cement before he slathered it on… but ***you'd better not!***

You'll see Cyrus from time to time throughout this manual. He'll show up whenever we hit a point where there have been some off-the-wall "short cuts" suggested in the past.

Look for Cyrus… but ***DON'T LISTEN TO HIM!***

CYRUS SAYS you need to buy at least a gross of sandpaper to have a good dope and fabric job. NOT SO. You can do gorgeous work in preparing your Ceconite covering job for a big trophy at Oshkosh with an iron, and skip lots of sanding.

## About the Other Cartoons...

Here and there you'll see cartoons like this, rescued from pilot training manuals of World War II. For those of you who were there, we think they'll be delightfully nostalgic. For younger builders, they're a humorous glimpse into what was perhaps the richest, most patriotic part of America's past.

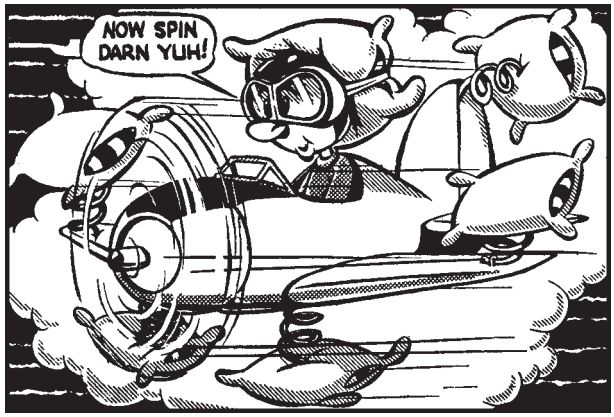

# 1 – Getting Ready

## The Goal of This Manual

We hate to see builders shy away from fabric-covered aircraft projects because they don't think they can handle the covering and finishing. They're depriving themselves of a very satisfying experience, and for no good reason. Fabric covering is not hard to do. Today's methods and materials are huge improvements over what was available back in the '30s. All it takes today is careful work and some patience. There's no magic required. *Really.*

This manual can take even a complete novice through the entire process of covering a newly-constructed homebuilt or re-covering a restored classic. The steps are the same. In either case, we'll assume you're familiar with the construction of the aircraft you're covering. If you don't really know your way around your aircraft, we strongly suggest you get some experienced help before you begin.

## This Manual & 43.13-1B/2A

FAA Advisory Circular 43.13-1B/2A, *Acceptable Methods, Techniques, and Practices – Aircraft Inspection, Repair & Alterations,* is the basic source document for covering aircraft. Chapter 2, sections one though four, is "acceptable data" regarding fabric covering technique, repairs, and inspection. Unfortunately, many of the procedures in 43.13-1B/2A are for Grade A cotton which is virtually impossible to find today.

The procedures in this **Ceconite** manual supersede similar procedures in 43.13-1B/2A and are considered "FAA approved data." In other words, if there is a conflict, use the Ceconite manual.

## The Ceconite System

### Certified Aircraft and STCs

The **Ceconite** STC (Supplemental Type Certificate) SA4503NM allows you to replace the original covering that was on your aircraft when it rolled off the assembly line, probably Grade A cotton and cellulose dope, with the **Ceconite / Randolph** system. It does not license you to get creative and depart from this manual in any way.

### The Ceconite STC Number

In the past, **Ceconite** had a specific and different STC number for every fabric style we offered. **Ceconite** now uses only one STC number, SA4503NM; this one number applies to all current fabric styles. Use this STC number for logbook entries and 337s.

**In order to fly a safe and legal aircraft, you must follow these Basic Rules.**

### The Basic Rules:

For certified aircraft, you ***must*** follow these rules without substitution. For experimental aircraft, we encourage you to stay with these rules for a safe cover job with proven performance.

❶ This manual supercedes all previous editions of the **Ceconite** manual.

❷ You ***must*** use the most current revision of this manual. The date of revision must be entered in all aircraft documentation and logs. Using an outdated manual voids the warranty.

❸ Products applied to a certified aircraft **must** have a Parts Manufacturer Approval (PMA). **Ceconite** fabrics, tapes, and cements, and **Randolph** coatings and paint all have PMA.

❹ You ***must*** use only **Randolph Nitrate and Butyrate dopes** in the build-up process. You cannot substitute coatings from any other process.

❺ You *must* use only **Randolph Colored Butyrate Dope or Ranthane** as topcoat paint over fabric components. Both **Colored Butyrate Dope** and **Ranthane** have a PMA and have established track records over **Randolph Nitrate and Butyrate Coatings.** *Using any other topcoat paint voids the STC.*

❻ You *must* heat tighten with a calibrated household iron only. Heat guns may not be used.

❼ You *must not* cover critical inspection ports. For example, some aircraft have inspection ports in the aft portion of the wing, aileron, or flap wells that allow inspection of the spar. These holes must not be permanently covered. If in doubt refer to the original aircraft maintenance manual.

**SUBSTITUTIONS WILL VOID THE STC AND YOUR AIRWORTHINESS CERTIFICATE IF DISCOVERED BY A SAVVY INSPECTOR AT ANY TIME DURING THE SERVICE LIFE OF YOUR AIRCRAFT. DON'T RISK IT!**

When you have finished your re-covering job, an **A&P with an IA** must complete an **FAA Form 337** to certify that the aircraft was re-covered according to the **Ceconite** STC. He must also make the appropriate entries in your logbook.

**The Approved Model List** (AML) of aircraft eligible for re-covering under the Ceconite STC starts on page 113 of this manual. If your certified aircraft is not included (but most have been during the 50 years the STC has been in effect), you can have it added to the AML by completing the Ceconite Installation Form on page 112. An A&P can fill this out and mail it to us for processing.

## Amateur-Built Aircraft

If, on the other hand, you're covering or re-covering an amateur-built aircraft with an Experimental Airworthiness Certificate, our STC does not apply as gospel. However, it's a good idea to follow the steps in this manual just as though you were working with a certified aircraft. AC 43.13 can also serve as an excellent guide. You can get a copy of it from one of the homebuilders' supply companies.

Simply passing an airworthiness inspection is no guarantee that what you have done is safe. Don't second-guess the experts. Follow instructions carefully and completely.

## The Fabric to Use

**Ceconite Heavy Weight 101 and Medium Weight 102** are manufactured under our PMA and are included in our STC. Remember, you MUST use our **Ceconite 101 and/or 102** fabric to comply with the STC. Both of these fabrics are marked with a stamp like the one shown here. These stamps appear on our fabrics and are a sure-fire way to identify a genuine **Ceconite** job. Our **Ceconite 101 and 102** fabrics may be mixed or matched on every aircraft included on our STC.

**Ceconite UNCERTIFIED LIGHT** is an uncertified fabric and is **not approved for certified aircraft.** It is approved for covering plywood surfaces on any aircraft, certified or uncertified. It may be used for any uncertified ultralight. **Ceconite Uncertified Light** fabric is not stamped.

We publish a *Fabric Product Data Sheet* (currently 2004-1) that presents and explains test reports on all three of our fabrics. We'll be happy to recommend a fabric style to fit your airplane. Just call our **Ceconite** Tech Support Line, 800-362-3490.

**Ceconite** finishing tapes, reinforcing tapes, threads, and cords have a sticker attached that says "Ceconite FAA PMA." Products without this sticker are not legal for use with our STC.

## Health Issues

### Protect Your Skin!

Serious allergic reaction to some chemicals can show up years after exposure to them, so protect yourself now. Start with one of the **barrier hand creams,** like Invisible Gloves, available from all the supply houses.

Then top that off with some of those **disposable latex surgical gloves.** They're cheap, so you can don new ones whenever solvents begin attacking the ones you're wearing.

### Protect Your Lungs & Body!

Some of the materials you will be using can do nasty things to you if you inhale them for any length of time. The first thing you should buy is a **good, effective respirator.** Don't begin your project without one!

Those paper masks won't do. You need the real thing, one rated for lacquers and enamels. Check with homebuilders' supply companies. They have respirators in their catalogs. You might even find a local source in your yellow pages. If you feel yourself getting nauseous while working with solvents, wear a respirator rated for organic solvents.

There's a right way and a wrong way to dress for spraying. Can you tell which is which above?

Wear a **Tyvek spraying suit,** or old clothes with long pants and a long-sleeve shirt. If you spill solvent on yourself, remove the clothes, wash your skin well, and put on fresh work clothes. Wash the first outfit promptly.

### Protect Your Eyes!

At some point in your project you're bound to spill or slosh or spatter something. Wear **safety goggles** in any situation where that might occur. Don't take chances.

## Fire Prevention

### Work in a Well-Ventilated Area

Some of the products used in the **Ceconite/ Randolph** system are **highly flammable.** While they are being used, potentially explosive vapors accumulate. Make sure there are no open flames, such as gas water heater or furnace pilot lights, anywhere near your work area. ***Outlaw all smoking.*** Lay down the law to visiting kibitzers. Be aware that even a sparking electric motor or a light switch could trigger a no-fun afternoon. Seek out all potential sources of flame or spark.

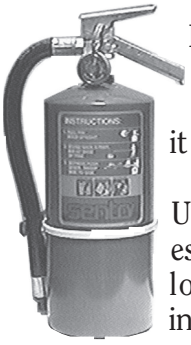

Have the right kind of **fire extinguisher** on hand, one designed for petroleum fires, and make sure it is fully charged.

Under certain circumstances, especially in warm weather with low humidity, the action of sanding or spraying can generate **static**

**electricity.** When this static charge is transferred to the fuselage or other part, the resulting spark could ignite solvent vapors explosively. Ground the structures being sanded or sprayed. Some builders even ground their spray guns.

## A Practical Work Area

**Make sure you have enough room to work.** You not only need room for the fuselage, wings, and other structures, but you also need plenty of room to walk and work around them without knocking things over or backing into fresh paint. Basements are poor choices due to lack of ventilation and potential fire hazards. Not only that, but the solvent vapors will rise right up in to the house above. Garages are better. **Empty hangars are best.** Just make sure you have plenty of room and that the area is as clean as you can make it. Dust and junk floating in the air will wind up in your nice new finish, guaranteed.

**Ventilation fans are very desirable.** They'll help with vapors, sanding dust, and spraying mist. Under no circumstance should you work in a closed room with no ventilation!

During the sanding it will occasionally be necessary to **flush the surface with water.** That means the floor of your work area should be able to stand getting wet. It also means you'll need a source of running water within hose distance.

### Atmospherics and Spraying

In a perfect world, your work area would always remain at 77°F with 0% humidity, the accepted laboratory standards. Fat chance. The best tool you have for climate control is your calendar.

**Temperature.** Remember this: the glossiness of a paint finish is determined by drying speed, and drying speed is determined by temperature. The slower paint dries, the glossier it becomes. As temperature goes up, drying time goes down. In a perfect world, you'd always spray at 77°.

If the temperature is 87°, the drying time will be cut in half. At 97°, the drying time is even shorter. If the temperature is 67°, the drying time is doubled. At 57°, though, drying time may be endless.

**Humidity.** The ideal humidity for spraying is anything between 0% and 70%. Since there are lots of places that never see humidity as low as 70%, we need to look at what humidity does to coatings.

As an aircraft coating dries, the rapidly evaporating solvents lower the temperature at the surface. Any water vapor in the surrounding air condenses on the surface. If the humidity is 80% or more, this condensed water vapor gives the coating a milky appearance called **blush.** It also weakens the coating. Blushed coatings MUST be sanded off and resprayed.

If you are stuck with high humidity, you can still spray with good results by using **Y-9910 Universal Retarder.** This is a special solvent that slows down the drying of the coating, therefore minimizing the chance of blush. Face it: if you spray on a 95° day with the humidity at 99%, you're going to have problems. Period.

Use common sense when spraying. Always wait for moderate temperatures and the lowest humidity. If you live in a normally hot, humid area, make sure you have lots of **Blush Retarder** on hand. Work in the cool of the early morning, or wait until a front has just blown through. Don't wet the floor in an attempt to keep dust down. You're just increasing the humidity. Sweep and vacuum the floor thoroughly before spraying, and give the dust in the air plenty of time to resettle. If you want to wash the floors, let them dry for a few days before you start spraying.

# Tools You'll Need

## Let's Start With an Ideal List.

- Fuselage holding and turning jig. We'll talk about this later.
- Sturdy sawhorses, about 3' high; pad the tops with carpet scraps. Great for wings and tail surfaces. We'll go into detail about this later.
- A nice big sturdy snag-free table. This will make handling and cutting fabric much easier.
- Drop cloths to protect floor, cover airframe parts, etc.
- An electric clothing iron. Don't use your wife's!
- A small "sealing" iron. Great for tapes, patches, and hard-to-reach areas.
- Thermometers to calibrate irons.
- Heat sink compound.
- An effective respirator, plus extra replacement filters.
- Brushes: 1″, 2″, 3″, and 4″.
- Glue brushes: ½″ wide (acid brushes are good).
- Sandpaper: 400-grit, "wet or dry."
- Two 12″ straight and two 12″ curved rib lacing needles.
- Sharp scissors. Polyester fabric dulls them quickly, so buy several pairs of cheap ones.
- Pinking shears. Buy a good pair and wear them on a cord around your neck while using them. If you drop them, they're ruined.
- Sharp X-ACTO or similar knife.
- Paint spray gun and accessories.
- Cotton rags. Do NOT use shop rags! They aren't clean enough, and residual silicone will ruin your work.
- Paper towels.
- Scotch-Brite pads, ultra fine.
- Single-edge razor blades. Get a big box.
- Chalk snap line.
- Measuring tape.
- Paint stirring paddles.
- Paint filter cones, 60x48 mesh.
- Soup ladle.
- Clean soup and coffee cans with tight lids.
- Small wide-neck container to use as a glue pot.
- Craft masking paper. Don't use newspaper.
- Six spring clamps with 2″ throats - for holding fabric.
- Wooden spring clothespins. Great for fabric work.
- T-head pins.
- Tack cloths - for cleaning just before painting.

## Fuselage Holding & Turning Jig

You can make a simple jig from two-by-fours, as shown here. The center square of the two-by-four "tic-tac-toe" grid bolts to the front of the fuselage using the engine mount bolt locations.

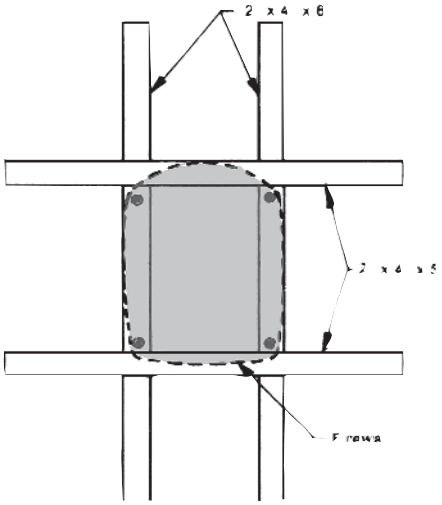


Make the legs long enough for the fuselage to sit level with the tail resting on one of your sawhorses. You and your helper can then turn the fuselage whenever needed.

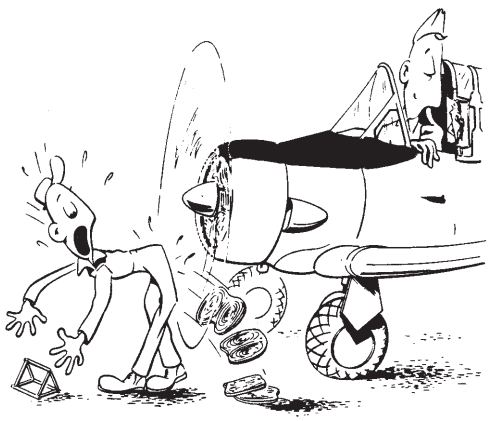

When running engine up to high power, be careful to have stick back and brakes applied.

## About Spray Guns

Don't skimp here! After all your careful and patient preparation, this is where "the rubber meets the road." You can ruin your entire job by trying to pinch pennies and using "bargain" spraying equipment. Don't do it. You'll hate yourself.

Most spraying is done with a compressed air system capable of at least 40 pounds of pressure AT THE GUN. Measurements taken at the compressor tend to be higher than the actual pressure delivered at the gun itself. Don't get fooled.

**If you use a compressed air system:**

- You must have filters and a water trap on the air line.

- Cleanliness is everything. The spray gun must be disassembled and thoroughly cleaned after EACH USE. Borrowed guns are never clean enough, and rented guns are usually junk.

- Pressure pot lines become coated inside with whatever's been sprayed. Solvents in subsequent spraying can loosen this old material which then contaminates your job. Replace pressure pot lines often.

**The newer turbine-powered high-volume, low-pressure (HVLP) sprayers are terrific.** They're expensive, but well worth it. Consider buying one with a few friends or have your club or chapter buy one for everyone to use. When you factor in the cost of the compressor, tank, lines, filters, water traps, and standard guns of a compressed air system, the cost of an HVLP isn't really that high at all. And the HVLP systems are self contained, more or less turnkey. All you need is 110 volts.

Use two lengths of hose with turbine-powered HVLP systems. HVLPs heat the air delivered to the gun, sometimes up to 90°. The extra length of hose solves this problem.

Regardless of the system you use, use the needle, aircap, and nozzle combination recommended by the manufacturer for the type of paint you're spraying. This information is usually found in a chart provided with spray guns. Most of the **Randolph** products you will spray are classified as lacquers, so look for the recommended needle, aircap, and nozzle for lacquer.

Sorry, but those inexpensive airless sprayers designed for latex house paint won't work for aircraft.

## Materials You'll Need

We'll use a J-3 Cub as our example. Naturally, your list depends upon what you're covering, and you can scale things up or down as needed. Here's our list.

- 45 yards of **Ceconite 102** fabric
- 1 roll of 1″ **Ceconite 102** linear finishing tape
- 7 rolls of 2″ **Ceconite 102** linear finishing tape
- 2 rolls of 3″ **Ceconite 102** linear finishing tape
- 1 roll of 4″ **Ceconite 102** linear finishing tape
- 1 roll of 4″ **Ceconite Bias** finishing tape
- 1 roll of rib lacing cord
- 2 rolls of ½″ reinforcing tape
- 2 rolls of inter-rib brace tape
- 1 roll of cloth anti-chafe tape
- 100 plastic drain grommets
- 30 inspection rings
- 30 inspection ring covers
- 1 gallon **New Super Seam** cement
- 10 gallons of **G-6302 Rand-O-Proof Nitrate Dope**
- 10 gallons **286 Nitrate Thinner**
- 10 gallons of **W-8350 Non-Tautening Clear Butyrate Dope**
- 10 gallons of **G-6303 Silver Rand-O-Fill**
- 10 gallons of **Colored Butyrate Dope** topcoat

- 30 gallons of **9703 Butyrate Thinner**
- 4 gallons of **Y-9910 Universal Retarder**

## Other Things You Should Know

The term "dope" refers to cellulose-based coatings and goes back to the earliest days of aviation. Nitrate dope was used first, then it was gradually replaced by butyrate dope during World War II. Because butyrate was somewhat less flammable than nitrate and weathered better, it soon became the predominant product, preferred over Grade A Cotton and Irish Linen.

Heat-tightened polyester fabric was introduced in the late '50s. This fabric was a big time saver when it was glued rather than sewn to airframes before tightening. **Ceconite** soon became the predominant polyester covering system, and ***flammable*** nitrate dope was resurrected as an initial coat over the slick polyester fabric. Butyrate dope wouldn't stick to raw **Ceconite,** so a combination system of nitrate/butyrate dope with **Ceconite** was introduced in the '60s, and this system remains unchanged today.

### Tautening vs. Non-Tautening Dope

All cellulose-based dopes – nitrate as well as butyrate – shrink as they dry. Over the years, as they do, they become drum tight. Used on natural fabrics, these "tautening" dopes were the only way to shrink the fabric on the airframe.

Modern polyester fabrics like **Ceconite** are shrunk with heat from a household iron; dopes only partially shrink them. Too much extra tautening can actually deform or damage the structure of the aircraft over time.

To prevent this over-tautening on today's fabrics, additional plasticizers are added to reduce the shrinking and produce "non-tautening" dopes. This is somewhat of a misnomer, since even "non-tautening " dope will shrink a little bit over the years as its plasticizers evaporate. Regardless, **Randolph** non-tautening dopes are the only ones permitted on the **Ceconite** STC.

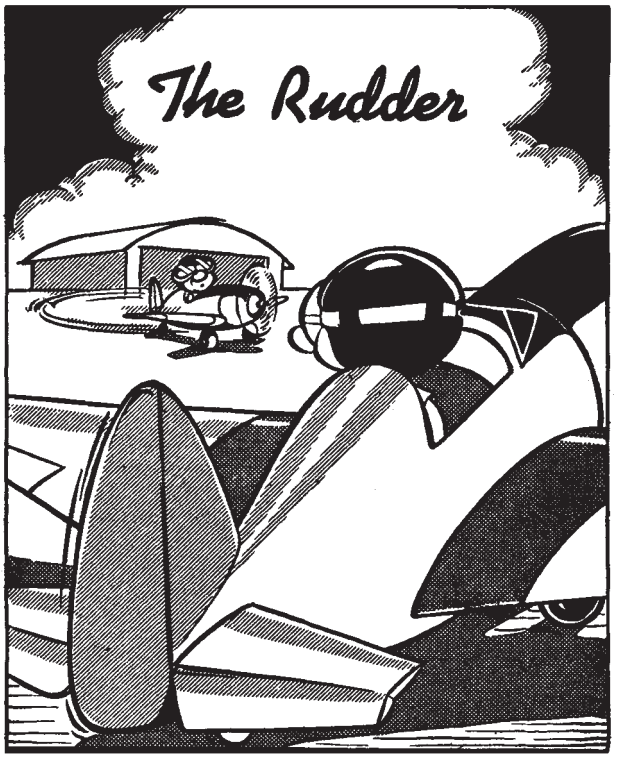

# Notes

# 2 – Airframe Preparation

## Removing Old Fabric

Old fabric should be removed with care. Use razor blades or an X-Acto knife to cut away the old fabric, and if necessary soak cemented areas with MEK to loosen the old cement. Take care not to splash MEK into your eyes or onto skin; wear protective equipment and goggles. Cut old rib laces before pulling fabric from ribs. If rib rivets are installed, carefully drill them out insuring the drill does not slip and damage ribs. If Martin or Cessna fabric clips were used, do not rip the fabric off the ribs without releasing the clips, or severe damage can result to thin aluminum cap strips. Note positions of inspection rings, fairleads, and drain grommets. A photographic record of the old installed fabric is always helpful.

## Take Your Time

The hours you spend preparing for the minutes you'll spend spraying will bring you years of enjoyment. Keep that in mind. There are no shortcuts to thorough, meticulous preparation.

## Epoxy – The Right Stuff

Whether you're preparing a steel, aluminum, or wood structure, do not use any of the familiar one-part zinc chromate primers or "spar" varnishes, the type you find in hardware stores. The fabric cements and dopes used in covering aircraft will wrinkle and lift them.

Use only two-part epoxy primers or varnishes. They are unaffected by cements and dopes. Two-part epoxy products may also be sprayed right over old zinc chromate or varnish for a safe attachment surface and additional protection from the elements.

## Wood Surfaces

Dry-sand old flaking varnish scale. You needn't remove all the old varnish, just the loose parts. After sanding, wipe the surface with **Randolph C-2210 Paint Cleaning Solvent** to remove any grease and contamination. Then wipe with a clean dry rag.

Now apply **Randolph EV-400 Epoxy Varnish** directly to the surface. Use our **EV-410 Catalyst,** and thin as instructed with **E-500 Epoxy Thinner.**

## Steel Tubing

If you are re-covering a tube-and-rag airplane, you must first remove ALL the old fabric. Once you do that, you'll be presented with tubing structures loaded with old primer and cement. There may also be some rust.

**If the rust is extensive,** you are probably facing some metal repair. Examine the structure carefully, marking areas that will need fixing. Make all needed structural repairs now, replacing damaged tubing or other members in accordance with accepted standards and practices.

Now you must remove the old cement, paint, primer, and rust WITHOUT pitting or damaging good metal under it. The best way to do this is by blasting it with one of the many media now available. Test a painted tubing scrap first. Find the combination of air pressure and media that will remove the paint and leave everything else.

Once the tubing structure has been repaired and stripped, the metal must be protected as soon as possible. Letting more than an hour or two go by between blasting and priming invites new rust

to begin forming. Make sure to have everything you need – cleaner, primer, catalyst, reducer, spray equipment, and spraying area ready to spray – BEFORE you start blasting.

Immediately before priming, wipe the bare areas with MEK or **E-500 Epoxy Thinner** to remove all traces of oil, grease, and contamination. Wipe dry with a clean rag, NOT a shop towel.

Finally, prime with **Randolph Epoxy Primer. Randolph** offers two colors of **Epoxy Primer: White W-2248 Epibond** and **Dark Green B-6433 Rand-O-Plate.** Whichever color you choose, remember that **Randolph Epoxy Primer kits have three parts.** Part One is the white or green primer, Part Two is the **EP-430 Epoxy Catalyst,** and Part Three is the **E-500 Epoxy Thinner.**

You need all three parts to do the job. See the *Product Profiles* in Appendix H at the end of this manual for a thorough explanation of mixing, application, etc.

## Fiberglass

Many fiberglass parts are pretty rough and will require some filling. Fill big holes or weave with **Poly-Fiber SuperFil,** available from most **Randolph / Poly-Fiber** distributors. **SuperFil** is sort of Bondo for airplanes; it works the same way, but being an epoxy product, it gives long service and works on any composite part. Apply **SuperFil** with a squeegee, let it dry overnight, then sand smooth. Prime with **Randolph White W-2248 Epibond** (see the section above for details).

You may need to spot spray multiple coats of **Epibond** into the areas filled with **SuperFil**. Since **SuperFil** is more porous than most finished composite parts, this spot spraying and sanding will give a smooth overall surface to the whole composite part.

## Aluminum

### Old Aluminum

After stripping, inspect carefully for corrosion. If there is any corrosion present, it all must be removed before you go any further. Use fine sandpaper (NOT emery), Scotch-Brite pads, or ALUMINUM wool. Do NOT use steel wool or a steel brush! These just introduce tiny bits of steel into the aluminum which will promote even *worse* corrosion. Avoid blasting. It is very hard on aluminum sheet. Old aluminum must now be acid etched, treated with a conversion coating, and then primed for best results.

Thoroughly wash all the aluminum parts with **Poly-Fiber E-2310 Phosphoric Acid Etch and Brightener,** diluted with two parts water. Use an ultra-fine Scotch-Brite pad.

Rinse thoroughly with clean water to insure that no etch is trapped in seams or under rivet heads.

Next, wash with **Poly-Fiber E-2300 Conversion Coating,** diluted with two parts water. Wash and keep wet with a sponge for at least five minutes. Rinse with clean water and allow to dry completely.

Prime with **Randolph Epoxy Primer.** We recommend using **Randolph W-2248 Epibond White Epoxy Primer** over aluminum. Remember that there are three components to our epoxy primer systems; you must also have **EP-430 Catalyst** and **E-500 Epoxy Thinner** to get the job done. See a complete explanation of epoxy primer in our *Product Profiles* in Appendix H at the rear of this manual.

### New Aluminum

There is no need to use **Phosphoric Acid Etch** on new aluminum. First wipe the new aluminum surface with MEK, Acetone, or Toluene to remove any packing oils. If the new aluminum has an *Alclad* surface, gently scuff the entire surface

with an ultrafine Scotch-Brite pad or 320-grit sandpaper to impart some tooth adhesion. Be careful not to leave any noticeable scratches in the *Alclad*; go easy.

Next, wash with **Poly-Fiber E-2300 Conversion Coating,** diluted with two parts water. Wash and keep wet with a sponge for at least five minutes. Rinse with clean water and allow to dry completely.

Prime with **Randolph Epoxy Primer.** See the directions in the paragraph on *Old Aluminum*.

## Dealing with Dents and Imperfections

Nothing looks worse than a new covering job with dents and old damage showing through. Maybe you taxied into a hangar door, or a hail storm tattooed your airplane, or maybe there are some low spots in those plywood fairings. Take the time now to smooth or correct them. Once the new fabric is installed, it's too late. Here are some suggestions.

### Replace Badly Damaged Areas

If the damage is severe or extensive, you might be better off just biting the bullet and replacing the material. The time you take installing nice smooth new aluminum or plywood will pay for itself later in the praise your airplane will get from jealous onlookers.

### Fill with Poly-Fiber's SuperFil

**SuperFil** works great on wood, fiberglass, steel, and aluminum. It really grips the surfaces and stays flexible enough over its service life to keep from cracking. DON'T USE BONDO! Bondo is **heavy! SuperFil** is *much* lighter. Bondo will shrink over time and separate from the surface. Bad news. And Bondo is made from polyester. You need epoxy products.

Apply **SuperFil** with a squeegee and work it into the basic shape you want. After 12 hours, **SuperFil** will be ready to sand and smooth. Apply primer to **SuperFil** used on aluminum; apply varnish to **SuperFil** used on wood.

Make a point of reading the **SuperFil** instructions. Remember to thoroughly stir each of the two parts separately before mixing them together. Mix them carefully, by either weight or volume. "TLAR" mixing ("That Looks About Right") doesn't fly when you're working with epoxy.

## Inter-Rib Bracing

This bracing keeps the ribs straight up and down when the fabric is heat tightened over them. It is nothing more than twill tape that provides stability for the ribs while covering them. As the drawing shows, the tape is looped around the top capstrip of the first rib halfway between the front and rear spars. Then it loops the bottom capstrip of the next rib, and then back to the top capstrip

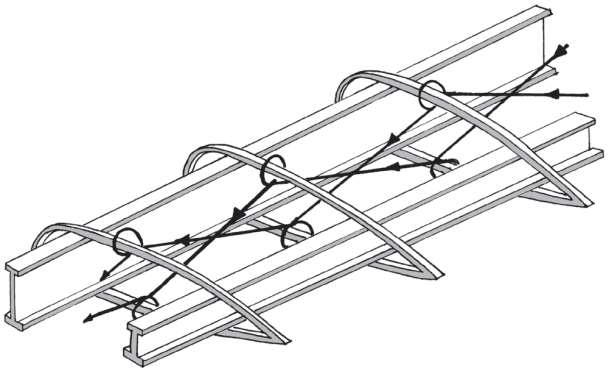

of the next rib, and so on until the whole wing is braced.

When complete, the inter-rib brace looks like a series of "Xs" in each rib bay. It is important to only loop the inter-rib bracing without tying it to each rib, except at the very ends. If you tie it, the ribs won't be able to move and readjust their positions during the tightening process. This bracing is not removed.

## Anti-Chafe Tape

Any sharp edge or structural feature that might cut or poke through the fabric should be covered with sticky-back cloth anti-chafe tape. It is self-adhesive and easy to use.

There's no hard and fast rule about where to put the tape. Obviously, it should go over rivet heads, metal seams, and sharp edges that could cut the fabric. You don't need it over smooth ribs or well-prepared wood or aluminum. Let your sense of touch be your guide. If you feel something sharp or pointy, put some tape on it.

**CAUTION:** Don't go crazy with anti-chafe tape and make your airplane look like the mummy's revenge! Keep tape off places where you need a good **New Super Seam** bond. Remember! Wherever you cement something to anti-chafe tape, the bond is only as strong as the sticky adhesive on the underside of the tape!

NEVER use paper masking tape, duct tape, or that aluminum-faced tape instead of genuine **Ceconite** anti-chafe tape! All of these retain water and will bring about rust or corrosion on metal under them. Also, paper masking tape turns brown with age, and will show through light-colored paint. *Very ugly!*

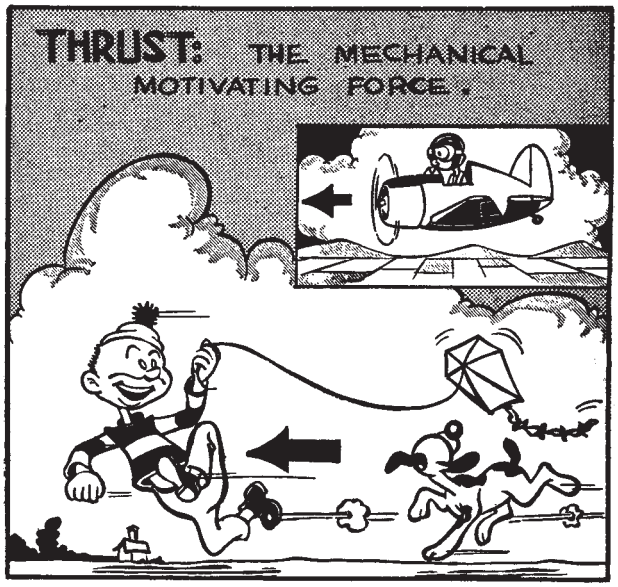


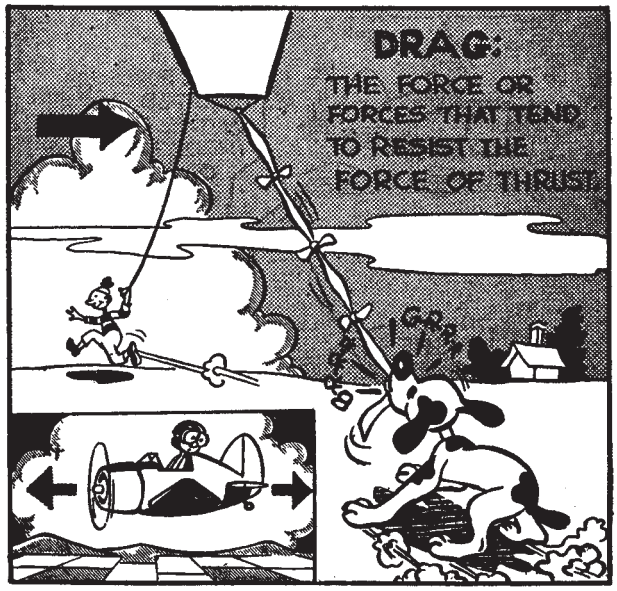


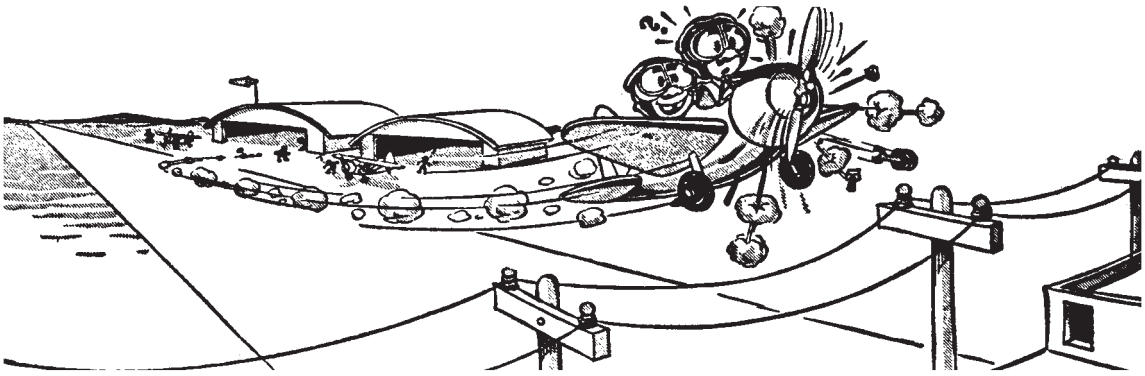

# 3 – Tune Up Your Iron!

From this point on you'll be using your iron to install fabric and smooth any wrinkles that appear. Now's the time to prepare your iron for use.

**The only authorized heat source for accurate control of the temperature transferred to fabric is a CALIBRATED CLOTHING IRON. Period.**

## Heat Guns? No!

How come you can't use your trusty heat gun? Because there's no way to calibrate it, and the temperature changes as the gun's distance from the fabric changes. You run a tremendous risk of permanently loosening your fabric and ruining all your nice work. Leave the heat gun for removing paint and emergency corn popping.

## The Right Iron

### Avoid Any Iron With an Automatic Shutoff!

Understand that individual irons vary. It helps if your iron is rated at 1100 watts or higher.

There may be some non-load carrying areas that can't be reached with a standard size iron, places where exact fabric tension is not important as long as the wrinkles are removed. For those

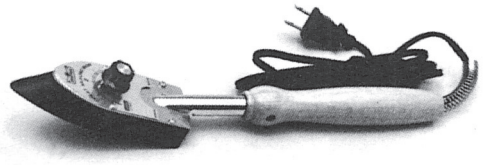

areas we recommend a small **165-watt heat sealing iron.** It's available through Ceconite distributors. It should be calibrated the same as your large iron and used only to smooth the edges of trim tapes and patches and in areas not subjected to flight loads, because these little irons can't maintain their temperature in contact with a large heat sink area.

## Why Calibrating Your Iron is So Important

Polyester fabric does different things at different temperatures, and we take advantage of this to make the fabric do what we want when we want it.

- **225°** is used to smooth the edges of finishing tapes and patches, to heat-form fabric around corners, and to remove fold creases.
- **250° is used for the final tightening.**

Although these irons are capable of putting out much more heat, and despite the fact that other covering systems like Stits Poly-Fiber use higher temperatures when shrinking, **250° is the maximum for Ceconite and dope.** Because dope, even non-tautening dope, will eventually continue to shrink somewhat over time, the 250° temperature allows some room for the dope to shrink the fabric without applying undue crushing loads on the airframe.

Above **350°** the fabric gets looser, permanently looser! At about **375°** polyester filaments start to thermo-soften and lose all measurable tension. At **415°** they start to disintegrate. Not good at all.

You can see why calibration is so important. **Don't just guess or assume your iron's dial is accurate.**

## How to Calibrate Your Iron Correctly

You need an accurate thermometer with a stem that can be placed in contact with the plate of your iron, plus some **silicone heat sink compound**, available from **Ceconite** distributors.

An accurately calibrated low-cost glass thermometer is available through **Ceconite** distributors. A deep fry, candy and jelly thermometer, available at hardware stores, is another economical choice. **Remove the protective glass shell,** check the calibration in boiling water (212° at sea level), then secure the calibration card with cement.

❒ Put a nice big glob of **heat sink compound** on the bulb end of your thermometer.

❒ Build a ½″-thick stack of **dry paper towels** on your workbench.

❒ Lay the **thermometer bulb** in the **center of the paper towels.** Place your **iron on top of the thermometer bulb** and the towels. **Make sure the bulb is in contact with the plate of the iron.**

❒ Advance your iron's heat control knob little by little, and watch the thermometer. You're looking for **225°.** Give your iron time to change temperature, and give the thermometer time to react.

❒ When the thermometer has settled down at **225°,** mark your iron's dial. Use something visible and removable. You'll probably have to change your calibration marks at some future time.

❒ Now do **250°.**

Your iron should hold the desired temperatures, ±10°. It should be recalibrated at the start of each new covering project or if it is dropped.

**Always use the same extension cord. If you use a different one, your temperature marks will be inaccurate!**

**SUPER IMPORTANT!**

**After calibrating is finished and your iron has cooled, carefully remove all traces of the silicone heat sink compound from the sole of your iron!**

**The latest and quickest (although more costly) way to calibrate your iron is with a temperature sensing gun, available through Ceconite/Randolph distributors.**

**You simply point the laser beam at the sole plate of the iron for a quick and accurate reading of the iron's temperature. Then mark 225° & 250° temperatures on the tape-covered dial.**

# 4 – Attaching the Fabric

## Cemented Seams

Our fabric is attached with **New Super Seam** cement, using ***cemented seams.*** A cemented seam is a place where **New Super Seam** is used to join two pieces of fabric where they contact an airframe structure, as when covering a wing, for example. There is virtually no sewing to do, unless you want to.

### Approved Cements

**New Super Seam** is the ***only*** cement approved for the **Ceconite** STC. Unlike earlier cements (Super Seam and Rand-O-Bond), it is only used for cementing fabric; it should never be added to dope to enhance adhesion when taping.

In our STC, cemented seams are approved for any airspeed and any wing loading if you follow these rules:

- All seams require at least a 1″ overlap of the two pieces of fabric.
- Wing leading edge seams require a 2″ fabric overlap.

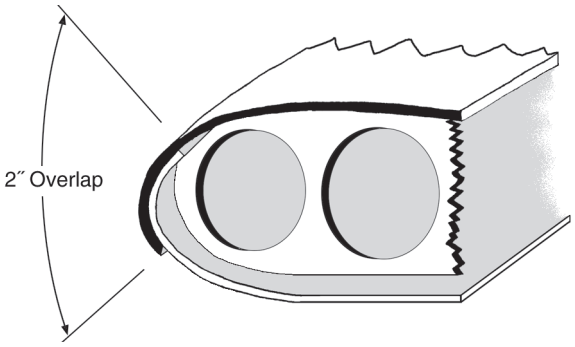


- Wing trailing edge seams require a 1″ fabric overlap.

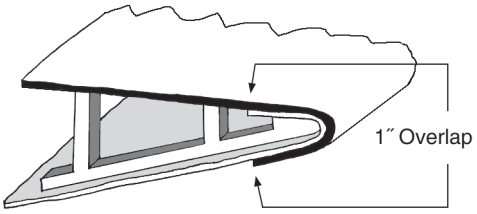


NOTE: The structure over which these seams are created has been left out of the illustrations to make them easier to understand.

- Cement **only** over two-part epoxy primer or Ranthane.
- All cemented seams must be covered with a finishing tape at least 2″ wide. You can use wider.
- All cemented seams must lie over a structural part of the airplane, and that structural part must be at least as wide as the cemented seam.

So what's a structural part of the airplane? On wings, it's the leading edge, trailing edge, the tip bow, and the butt rib. Ribs are not considered structural.

On control surfaces, it's leading and trailing edge or the perimeter tubing.

On fuselages, it's the longerons or main cross tubes that are part of the load-bearing structure. Wooden formers or stringers that are there just to give shape aren't considered structure.

**All fabric edges that will overlap as part of a cemented seam should be cut with STRAIGHT SCISSORS.**

Here's a great way make a sharp cut with no loose threads or ravels:

**1.** Draw your cut line with a soft lead pencil.
**2.** Coat the line with a thin coat of **New Super Seam.**
**3.** When dry, cut with straight scissors.
**4.** *Voila!* A crisp, sharp cut!

## The Cementing Process

Use a soup can for the **New Super Seam** with a 1˝ wide gluing brush. If the **New Super Seam** gets thick in the soup can, add pure MEK to get it back to the original consistency. If you spill or have a messy area with excess ooze or drips, clean it up with MEK. MEK will clean up even dried **New Super Seam.**

**New Super Seam** cement dries fast… *really* fast. In hot weather it can dry in five minutes. It normally dries in about 15 to 20 minutes.

Because **New Super Seam** cement dries so fast, you have to brush it on a little at a time, then stop and press the fabric into it while it's still wet. Normally, you only cement about 12˝ to 18˝ at a time to keep it from drying. The trick is to keep the cement liquid when the fabric is placed into it. If it dries, that's no good. You must do it again.

The best cement bond is accomplished by brushing about a 1˝ wide strip of wet **New Super Seam** onto the area where fabric is to be attached, then immediately laying the fabric wrinkle-free into the cement. Force the cement up through the fabric until it wets out the surface. Use your fingers (you do have on your barrier cream or latex gloves, don't you?) to smooth the fabric into the wet strip of cement, making sure it penetrates the fabric. Better still, use a squeegee.

If you make a mistake, you can uncement any seam. Simply wet the seam with MEK on a rag, pull the seam apart, and immediately re-cement it correctly with fresh **New Super Seam.** You can't make a mistake here that MEK can't fix.

**Don't brush more New Super Seam cement over the top surface of a drying cemented seam. Resist this temptation! Doing so could hurt the bond. The top coat will dry before the original bottom coat, impeding drying of the bottom.**

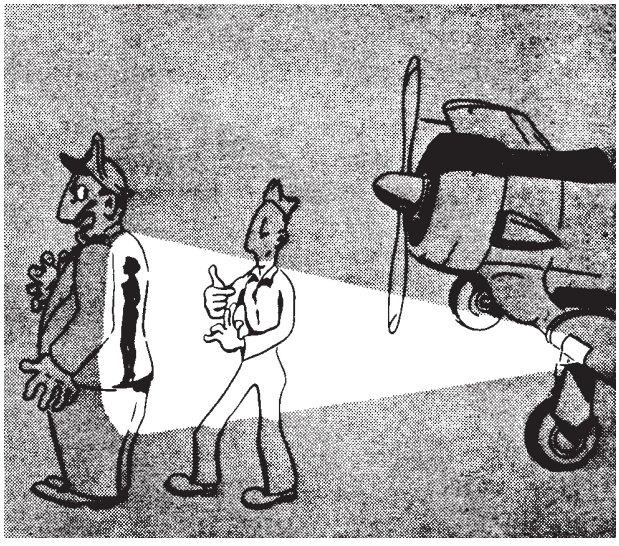

Before setting out on a night flight, check your airplane's lighting system.

# 5 – Let's Do a Wing!

You're going to cover a wing from start to finish, right up to where you're ready to begin building up the final coating. Once you understand the steps involved, you'll be ready to tackle the rest of the airplane.

### Basically, the Steps Are...

1. Cement the new fabric to the wing.
2. Heat-tighten the fabric.
3. Brush on 1st coat of **G-6302 Rand-O-Proof.**
4. Rib-lace the fabric to the wing.
5. Apply finishing tapes and inspection rings.
6. Smooth rough tapes and imperfections with the iron.

All the prep work discussed earlier, priming, varnishing, inter-rib bracing, anti-chafe tape, etc., is done, right?

If you have control cables installed, or electrical wire for lights, pull them all normally taut and secure them that way with clamps or tape or whatever.

You'll use the **blanket method** to cover this wing. A blanket is simply a rolled-out length of fabric cemented to the wing. **Ceconite certified fabrics 101 and 102** are about 70″ wide, so they can easily cover almost any normal wing. If you have an unusually wide chord, **two pieces of fabric can be sewn together to make a wider blanket.** Or you might be able to use three pieces of fabric with an insert, as long as you follow the basic rules for cemented seams. If you think you'll need to sew fabric together, see Appendix A for information on sewn seams.

### Handy Sawhorses

**The best way to hold the wings** for covering is to rest them on specially modified **sawhorses.** Two pieces of wood, typically 2-by-4s long enough to reach across at least two ribs, are fastened perpendicular to the top beam of each sawhorse. Space them the same distance apart as the spars.

Cover the whole shebang with scrap carpet. Position the sawhorses beneath the wing with the padded pieces parallel to the spars and directly under them.

## Covering the Wing, Step by Step

The game plan for this wing is simple. You'll use **one long piece of fabric** applied spanwise to cover the bottom of the wing, and another for the top.

Following our basic rules on cemented seams, you'll join the top and bottom pieces with a 2″ overlap at the leading edge and 1″ overlaps at the trailing edge, tip bow, and butt rib. You won't cement fabric to the ribs themselves, since later you'll use rib lacing or some other mechanical means to hold the fabric to the ribs. Other common mechanical attachments are pop rivets, PK screws, and fabric clips. More about them later.

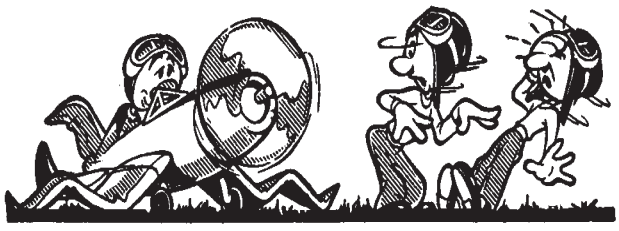

**You'll start with the bottom of the wing first, although it doesn't matter.**

---

**Important Note: Notice that the first dope we call for is Green G-6302 Rand-O-Proof nitrate dope. Nitrate dope is the only dope product that will stick directly to polyester fabric; butyrate dope will not. (Have no fear, butyrate sticks great to nitrate, so we use butyrate in later coats over the nitrate for its superior properties.) Rand-O-Proof is especially formulated for the first coat of nitrate, but you could also substitute any of our other nitrate products: Blue W-7868 nitrate or Clear E-4964. Just make sure nitrate is the first thing to touch Ceconite polyester fabric.**

---

## First, the Leading Edge

❒ Mix up some thinned **Rand-O-Proof.** The recipe is **one part Rand-O-Proof to one part 286 Nitrate Thinner.**

❒ Brush **two coats** of this thinned **Rand-O-Proof** onto the leading edge to provide a "bedding" that will reduce the possibility of pinholes in the finish coat. Actually, all large metal, wood, or fiberglass parts that will be covered with fabric should get these two coats of **Rand-O-Proof.**

❒ Let this dry for about 15 minutes.

❒ Get out your chalk line and snap a line along the center of the leading edge. Then measure 1˝ above the center line and 1˝ below that center line and snap parallel lines at those marks. By the way, regular blue carpenter's chalk lines will disappear later and won't bleed through. These chalk lines will be your guide lines. Cement bottom fabric to this line.

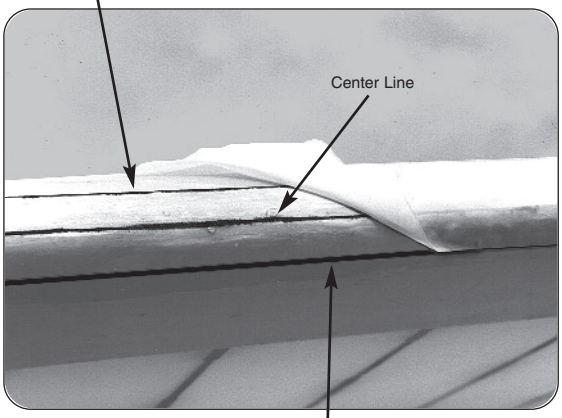


Cement the top fabric to this line. If you use these lines when cementing, you are assured of straight seams with a legal 2˝ overlap.

❒ Roll out a piece of fabric to cover the bottom of the wing. Trim off any selvage (built-up edges where threads are doubled over during looming). They may show through the finishing tape. Trim it off carefully with sharp **straight scissors.** Remember to first coat the cut line with **New Super Seam** for the sharpest line with no raveled threads. Flaws and ravels will show through later. If the selvage is straight and is not noticeably raised, you may choose to leave it on.

The fabric has no top or bottom. There's no special orientation to the weave. Attach it with the stamp in or out. Doesn't matter.

## Scallops

Scallops are troughs that form between the ribs, more so with modern polyester fabrics than classic Grade A Cotton. Although they present no aerodynamic problems, for cosmetic reasons, some prefer fabric that is more level to the ribs with little scalloping. To avoid scallops:

1. Use **Ceconite 102.** Its weave pattern results in little to no scalloping.

2. If you use **Ceconite 101,** consider purchasing a pre-sewn wing envelope sewn with the seams running chord-wise. This chord-wise orientation also prevents scalloping.

However, you can always use **Ceconite 101** with the blanket method; the aircraft will fly exactly the same. It will just show a bit deeper trough between wing ribs.

## OK... back to work.

❒ Allow about an extra foot at the wing tip and the butt, and cut it off the roll. Clamp it in place with spring clamps or clothespins. Don't be afraid to remove the clothespins and move the fabric as necessary throughout the cementing process.

❒ Starting at the butt rib, brush a strip of **New Super Seam** about 2″ wide (1″ each side of the center line) and 12″ to 24″ long along the leading edge where the fabric will be attached. Line up the fabric edge with the appropriate cement line.

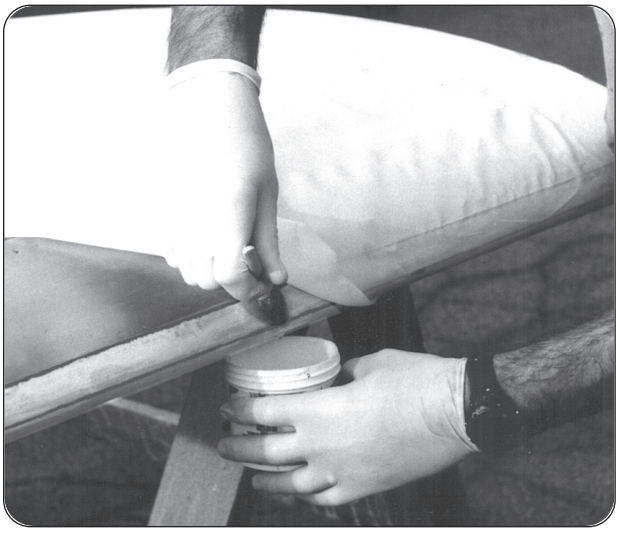

**Note: A squeegee is an excellent tool to use when cementing. Keep a few around, and clean them regularly.**

❒ Lay the fabric onto the wet cement. Work the fabric into the cement with the squeegee or your fingertips. Squeegees work better and have the advantage of spreading lumps out. Work in short sections, applying tension to the fabric as necessary to keep the wrinkles out. Think ahead though. Make sure the whole piece of fabric is aligned and lying where you want it to be. Stop every now and then and look at the whole job. If you're unhappy with an area, un-cement it with MEK and do it again.

❒ Continue this process, working 12″ to 24″ at a time, until the entire bottom section of fabric is attached to the leading edge. Let this dry for about 15 minutes.

### How Tight Should That Fabric Be?

Let's talk about how tightly you should be attaching the fabric. How taut you pull the fabric as you cement it at the trailing edge has a big effect on the final tension of the fabric when it is eventually tightened with the iron. The combined effect of heat shrinking at 250° with the natural shrinkage of the dope will shrink the fabric about 10% overall.

On a wing 60″ wide, that means it will shrink about 6″. If for some reason you left 6″ of slack in the fabric (and you certainly wouldn't want to do that), the fabric would pull up and conform to the shape of the wing, but would be far too loose. On the other hand, if you pull the fabric as tight

as a bedsheet in boot camp (remember bouncing a quarter off it?) and cement it down, and then tighten it, the resulting tension can warp or bend light structures. Stamped ribs or thin tubing can be deformed when the fabric is applied too tight.

As a good rule of thumb, the fabric should look like a bed sheet with the big wrinkles pulled out of it... snug, but not tight.

## OK... back to work.

## Uh Oh... Protrusions!

Strut fittings and other attachment points can work like tent poles under the fabric. If the protrusions are less than 2˝ above the surface of the wing, you don't need to cut the fabric to make a hole for the protrusion before heat tightening. Leave the fabric intact and tighten it right around the protrusion. Don't worry, they won't rip through. More on this later.

If they are 2˝ or more, you'll have to make a cut to let the protrusion through. Brush some **Rand-O-Proof** over the area of the protrusion *before* you cut to keep the fabric from raveling around the cut. Make the smallest possible cut you can. Make sure the fabric is as close to its final position as you can before you cut anything. When you tighten the fabric, the hole will get a lot bigger, so take care.

## Next, the Trailing Edge

❒ Pull the bottom fabric gently toward the trailing edge to remove wrinkles. Rough-trim it to overhang 6˝ minimum and secure it with spring clamps. Rough-trim the fabric so it will fold at least 1˝ down into any control surface recesses. Industrial single-edge razor blades are good for this. Inside corners of flap and aileron recesses are cut at 45° to allow the fabric to fold down at the sides.

❒ Cement the fabric to the BOTTOM surface of the trailing edge ONLY. Work from the butt rib to the wing tip in short sections, keeping the wrinkles out just as you did on the leading edge.

Now, before cementing the fabric to the TOP surface of the trailing edge, you're going to heat-form the fabric around it. It's much simpler to pre-shape the fabric than to use clothespins, spring clamps or fingers to hold it in shape around the edge of the trailing edge while the **New Super Seam** cement dries.

**Warm up the iron to 225°.**
You DID calibrate it, didn't you? It's VERY important!

❒ With your iron, roll the fabric around the trailing edge, working from the bottom surface around to the top. Apply pressure so it permanently creases and takes the shape of the trailing edge. If you stay with it, the fabric will not only crease around the corner, but will lay flat on the top surface of the trailing edge without using clamps. It should end up like this:

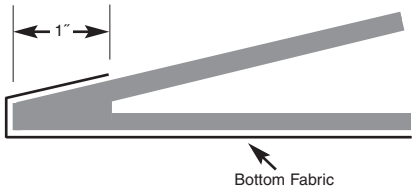


The reason you are wrapping the fabric entirely around the trailing edge is to make sure you wind up with a real overlapped cemented seam. Later, when you attach the top fabric, it will overlay this bottom fabric.

That's where the required overlap comes in. If you simply trimmed the fabric flush with the trailing edge and then cemented it down, you would have no fabric-to-fabric overlap.

**REMEMBER, you must always have an overlap.**

❒ Once the fabric has been heat-formed to assume the shape of the trailing edge, cement the fabric down and trim it off. Take care trimming. Uneven lines or raveled threads will show later.

## Now for the Butt Rib

❒ With the wing still top side up, start heat-forming (225 to 250° iron) the extra fabric at the butt rib. You want to cover the entire butt rib with fabric. Heat-form carefully to make the fabric bend around the corners and edges to assume the shape of the rib.

Heat-forming is best done by pulling the *dickens* out of the fabric (you can't tear it) and applying heat with the iron on the area to be formed. Stay with it; you can make the fabric take any shape you wish with enough practice and patience. Heat forming gets rid of all potential wrinkles and keeps you from having to cut "darts" in the fabric. Darts are those ugly 45° slits we used to have to cut in cotton to make the fabric conform to curves. With pressure and patience, you can even form polyester fabric around a bowling ball with no wrinkles. True.

❒ When you've successfully formed the fabric, cement it to the butt rib. You may need to make some cuts for cables or wires.

**Never mark on fabric with anything but a soft lead pencil or a chalk line. Pens, magic markers, etc. will bleed right through your final paint. V E R B O T E N !**

❒ Trim the fabric even with the top edge of the butt rib. Later you will heat-form at least an inch of the top wing fabric around the corner and down onto the butt rib to make our 1-inch overlap.

## Aileron & Flap Recesses

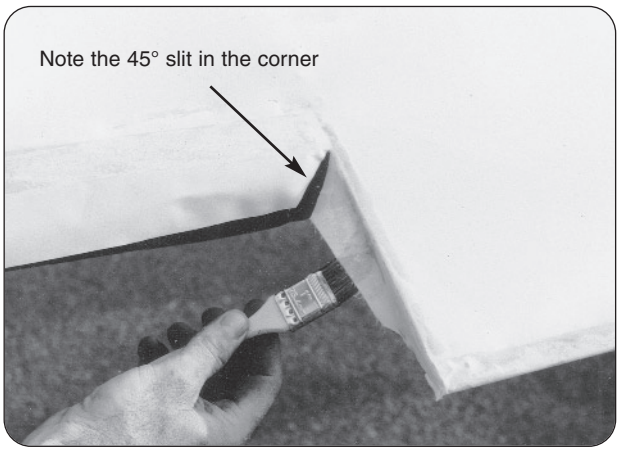


❒ For aileron and flap recesses, heat-form the fabric into the recess and cement it securely. Put the fabric overlap inside the recess as shown.

## The Curved Wing Tip Bows

You should have plenty of excess fabric left at the wing tip, hopefully about a foot. This excess gives you a good "handle" to pull on while heat-forming.

❒ Make a small "ironing board" out of cardboard, about 5˝ x 3˝.

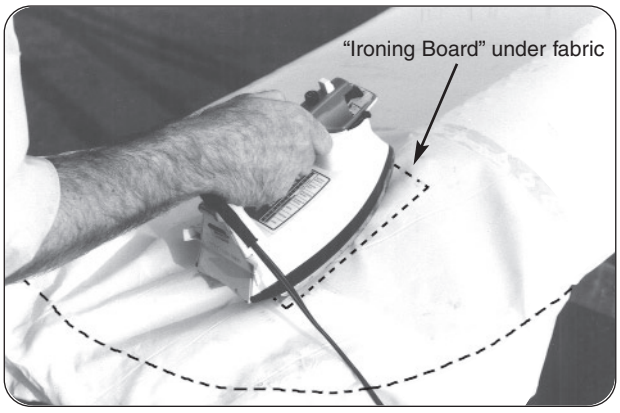

❒ Place the ironing board under the fabric about a foot in from the bow. Tighten this area at 250°. This will help the heat-forming of the fabric at the tip. If you tighten the center of the radius, it makes it easy to make the curve at the bow.

❒ Now start rolling and heat-forming the fabric around the tip bow with the iron set at 250°. Roll and form the fabric as far as you can to the inside of the bow.

**Yes, sharp-eyed readers! This IS the TOP of our wing, just to show how the curvature is smoothed out. You should start with the BOTTOM of the tip bow.**

❒ Pull *hard* on the fabric around the bow and apply heat. The trick is to get the fabric wrapped around the bow at least an inch. More is even better. Whenever you can, wrap all the way around to the inside of the tube so the seam won't show.

**At some point, you'll have to turn the wing right side up to wrap the bottom fabric around the bow tubing.**

❒ When you have the fabric well formed to the inside of the bow, cement it down. Try to cement it in one application, rather than in

short sections. You have to work fast, but you'll get fewer wrinkles.

**A neat way to trim** is to use a single-edge razor blade. Hold it firmly on the surface and pull the fabric into the blade. Don't slice with the blade; you could cut the primer or fabric below.

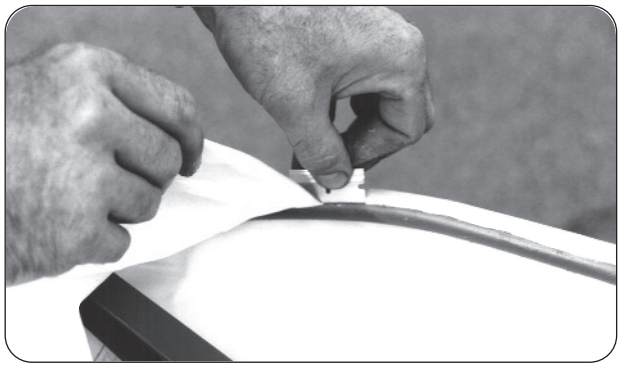

❒ Let the **New Super Seam** dry for about 15 minutes after the bottom fabric is cemented all the way around the perimeter of the wing.

OK, now the bottom piece is on, and most of the basics have been done.

❒ Before you attach the top fabric, go over all the cemented areas with an iron lower than **250°.** Use enough pressure to take out all wrinkles.

The idea is to iron out all wrinkles or imperfections in the cemented areas of the bottom fabric before you cement the top piece over it. The smoother

you can make the cemented areas, the better they will look later when covered with the top piece of fabric. **You are using the iron on JUST THE CEMENTED AREAS now.** You'll heat tighten the whole wing later, after the top piece is applied. Patience.

Notice how the iron can take out all the wrinkles that occur during the cementing process. Work carefully and stay with it until all the wrinkles are gone. Use pressure and the tip of the iron. The iron also softens the **New Super Seam** below the fabric, allowing you to re-smooth any lumps. Use the little sealing iron in tight places.

**NEVER APPLY AN IRON HOTTER THAN 250° TO A CEMENTED AREA. DOING SO COULD RELEASE THE SEAM OR THE BOND!**

## Now for the Top Fabric

❒ Roll out the top piece of fabric. Clamp and trim it as before, with a foot extra at the tip and butt.

❒ Cement the leading edge, aligning it to the lowest chalk guide line. That line is now covered by the bottom fabric and may be hard to see. If so, re-chalk it.

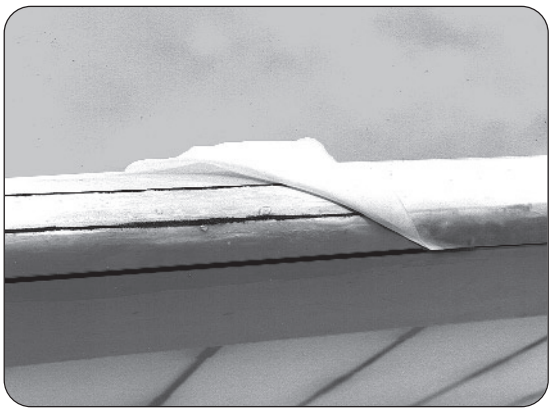

❒ Cement the trailing edge as before. For the best overlap seam, heat-form the top fabric around both sides of the trailing edge and cement it to both sides. That will give you more than the required 1˝ overlap and a very strong seam.

If your trailing edge fairing is at least 1˝ wide, you can simply cement the fabric to the top of the trailing edge and trim the fabric off flush without wrapping it around. That would make a legal 1˝ overlap also.

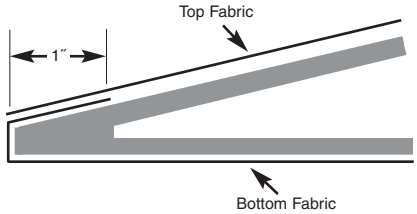


❒ Heat-form the top fabric over the edge of the butt rib until the fabric is smooth and flat. Keep forming until at least an inch of formed fabric lies flat over the butt rib. Trim this neatly and cement it to the fabric below making sure you have a legal 1˝ overlap.

❒ At the wing tip bow, heat-form the top fabric the same way you did the bottom. Make sure you have a 1˝ overlap where the top piece overlies the bottom. Trim the top piece with scissors as neatly as you can. Razor blades are dangerous here; you could inadvertently cut the bottom fabric while trimming the top.

## Before You Start Ironing...

OK, now for the *fun* part. You are about to tighten the wing fabric with your **carefully calibrated iron.** The iron is ready, and the untightened wing is on the sawhorses. But first, a few important points.

❖ **Remember, a calibrated iron is the only approved source for tightening. Heat guns or uncalibrated irons are the surest way to damage your project or invalidate your STC.**

**If you ignore this and use a heat gun or an uncalibrated iron, you could wind up with permanently loose fabric! At best, this means cracked paint. At worst, it causes fabric floppy enough to seriously deform the airfoil in flight! Bad news.**

Regardless of what Ol' Cyrus says, you can't tell how tight your fabric is by feel. Thumping and bouncing quarters are old aviation wives' tales. You must know the exact temperature applied to the fabric to know how much it has been tightened.

**OK... back to work.**

## Heat Tightening

### Make Sure the Iron is Set to 250°.

The idea is to work from the two ends of the wing toward the middle, rather than from one end to the other. This spreads the increasing tension evenly and symmetrically across the entire wing surface.

❒ Hold the iron in the center of the fabric near the tip bow. See the fabric pull up tight around the iron? Move the iron slowly around the fabric to take out the big wrinkles. Iron over the hard surfaces too, like the leading edge.

**Don't start at one end of the wing and work toward the other! This can exert enough asymmetrical force to bend light structures. You could put unwanted dihedral in your wing (or maybe you always wanted a "bent-wing" Corsair), or you could wind up with deep troughs in the fabric between ribs as the fabric is pulled spanwise in one direction only.**

❒ Now go out to the opposite end of the wing by the butt rib and do the same thing. Keep alternating your tightening passes from opposite ends of the wing, working toward the middle.

Don't be afraid of letting the iron pause on the fabric. It won't scorch the fabric like it does your cotton shorts, nor will the fabric get any tighter. The amount of tightness depends upon *temperature,* not time.

❒ Turn the wing over and tighten opposing areas at 250°, as you did on the top side of the wing.

### Protrusions

Remember those strut fittings sticking up like tent poles 2″ or less under the fabric? Iron right around them; they won't break through. Later, when the whole wing has been tightened at **250°,** cut the fabric just enough to let the protrusion pop through and cut no more. The idea is to make the smallest cut you can.

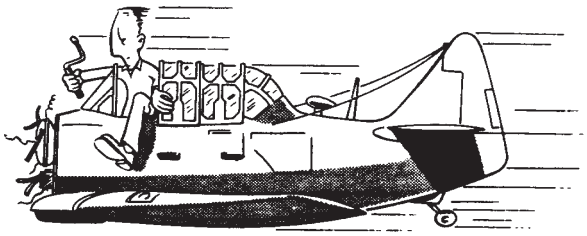

Do not attempt restart if engine stopped because of obvious mechanical failure.

## 1st Coat of Rand-O-Proof

Applying **Rand-O-Proof** does two things:
1. It seals the fabric.
2. It acts as a cement that soaks through the fabric and further secures the fabric to the airframe.

**Rand-O-Proof should always be thinned one to one with 286 Nitrate Thinner.**

**Rand-O-Proof** has a green tint so you can see where it has been applied. Use **Clear E-4964 Non-Tautening Nitrate** on open cockpit aircraft where you don't want the green tint to show.

❒ Thoroughly scrub the fabric with MEK or **286 Nitrate Thinner.** Use a clean rag. Don't flood the cement joints!

**A NOTE ABOUT RAGS: Use only new rags. Cotton is best, but watch the lint. NEVER USE INDUSTRIAL SHOP RAGS OR LAUNDERED RAGS. They're full of somebody else's silicone and impregnated grease that never really come out. Rub a shop towel on your fabric and you may ruin it.**

Go to a builders' supply store and buy fresh **painters rags.** Or go to a fabric store and buy cheap **100% cotton cloth.** They're worth the expense.

❒ After scrubbing the fabric with MEK or thinner, follow by passing a tack rag lightly over the surface to pick up any dust or lint.

Cut an old rectangular can (like a thinner can) to make a nice **Rand-O-Proof** application bucket. The handle at the top makes it easy to hold while you are brushing. Stick a piece of rigid wire or welding rod through the sides to wipe the brush on or hold it out of the liquid.

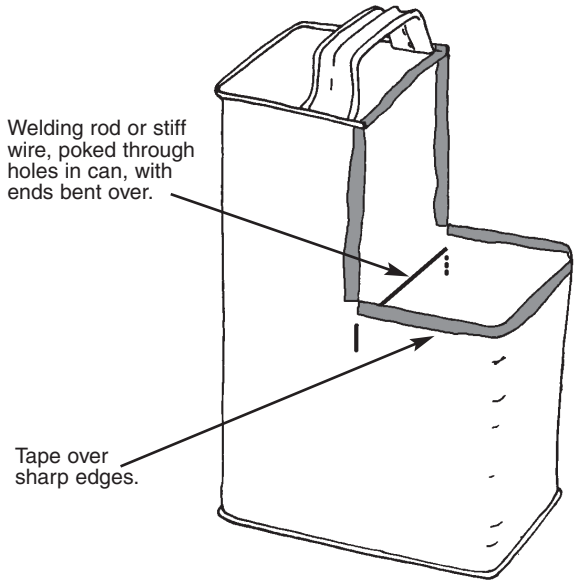

**A WORD ABOUT BRUSHES: Natural-bristle brushes are best for Rand-O-Proof. You can use high-quality polyester brushes, but avoid foam or nylon. They dissolve in solvents. Buy a good 3˝ brush for applying Rand-O-Proof to fabric and a good 2˝ brush for applying finishing tapes later on.**

Ok, get your bucket of thinned **Rand-O-Proof,** a good 3˝ brush, and a can of MEK or thinner with a rag.

❒ Brush **Rand-O-Proof** liberally over all the fabric. Brush all open fabric areas and fabric over the hard surfaces. The idea is to turn the fabric green, make it look slightly shiny and wet, and leave no dry starved areas.

**This is no time to skimp!** You need to really wet the fabric to fill the weave. However,

avoid putting on too much. If you see runs forming on the inside surface of the fabric, you are going on too heavy, and those runs could show through in the aircraft finish. So try to put on enough to wet the fabric without any runs forming on the inside of the surfaces. Notice that over the leading edge the **Rand-O-Proof** soaks through and further bonds the fabric to the hard surface below.

**Don't leave any dry areas or places where the surface doesn't look translucent when you're through brushing.** This would mean the weave isn't sufficiently filled, and it leads to big problems with pinholes later. We'll talk about pinholes further on.

The idea is to brush on a wet coat, and then make only one more pass with the brush to level any small bubbles that may have formed. Look at the wet surface glare area to check for bubbles.

**Work fast, quit brushing, and get your brush out of there before the Rand-O-Proof dries.**

**Rand-O-Proof dries in about 15 minutes.** In hot weather, it can dry in as little as *5 minutes!* You have to brush it on and then quit fiddling with it. If you continue to brush while it is drying, you can leave serious brush marks.

*"Can't I spray this first coat of Rand-O-Proof?"*

We don't recommend it. Brushing does a much better job of filling the weave. If you don't fill the weave sufficiently, you get pinholes later.

Brush marks are not a problem if you follow the instructions above.

*"Can't I just sand the drips or flaws in Rand-O-Proof?"*

Nope. There is not enough **Rand-O-Proof** on yet to sand. You will have plenty of opportunities to sand later in the process.

## Rib Lacing

Fabric on wings needs to be mechanically secured to the ribs rather than just cemented. The standard mechanical attachments are: rib lacing; PK screws; pop rivets; and fabric clips.

**On certified aircraft,** the method you use to secure the wing fabric to the wing ribs should be the same one used at the factory when your airplane was manufactured. If you want to use a different method, you have to get a field approval from an FAA Field Service District Office.

On some aircraft, the tail feathers and occasionally some fuselages were rib laced. Again, replicate the way the factory did it.

Using cement alone is a recent idea that came out of the ultralight movement. The theory was that since the speeds and wing loadings were low, you didn't need mechanical attachments. However, many kit planes have evolved from enclosed ultralights to high-horsepower firebreathers. Some have 180 HP! **They need to be rib laced!** Additionally, any ultralight or very light aircraft you plan on keeping for more than just a couple of years needs **RIB LACING.**

Incidentally, we call it *RIB LACING* rather than rib stitching because we are *lacing* around the whole rib, not just stitching it to the top or bottom rib caps.

Aircraft fabric cement is made for shear loads, not peel. But in flight, an aircraft is subjected to constant peel loads from the center of lift on the top of the wing. The giant vacuum cleaner called lift is always trying to peel your wing fabric off the top surface.

Aircraft fabric cements were never designed to resist this peel force, certainly not for the long service lives fabric covering jobs can last today.

**If you're covering an experimental aircraft for which there is no rule or precedent, WE STRONGLY RECOMMEND RIB LACING OR SOME OTHER MECHANICAL ATTACHMENT. Fabric cements were never meant to be the sole means of attaching fabric to ribs, even to 1˝ ribs.**

## How Far Between the Laces?

Let's start with how to plan and lay out rib lace spacing. This works for screws and rivets, too.

Take a look at this chart:

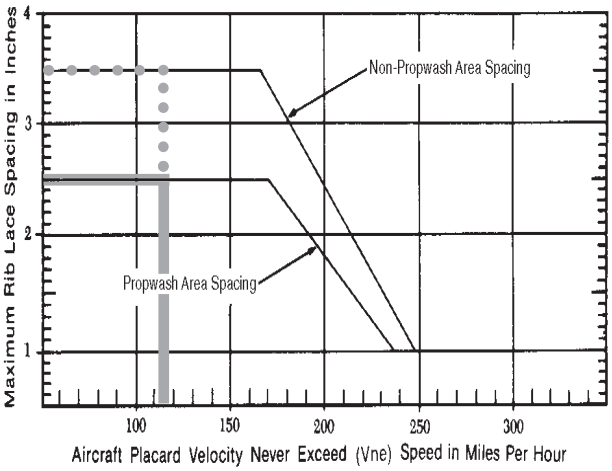


This same chart is also in the FAA's AC 43.13 and should be used if you don't know the rib lace spacing of your aircraft as it was manufactured.

The bottom of the chart shows the placard maximum speed of aircraft in miles per hour. The left side shows the distance between laces (or screws or rivets).

Notice that there are two lines, one for spacing in the propwash areas, and another for spacing in other than propwash areas.

**Propwash area includes all the wing ribs included within the diameter of the propeller, plus one more rib.**

## Using the Chart

We'll use our J-3 Cub as an example. Position the wing right side up. We'll mark the top of the wing first.

On the chart, you draw a vertical line up from the Vne speed of the Cub, which is 115 mph, until it reaches the line marked "Propwash Area Spacing." Then you draw a horizontal line from that point of intersection over to the scale on the left side of the chart. That gives us a spacing of 2½˝ inside the propwash area. Then you extend the vertical Vne line to the "Non-Propwash Area Spacing" line, and turn left again to the left side of the chart. This gives us a rib lace spacing of 3½˝ outside the propwash area. Perform these same steps for your airplane.

Most sport aircraft work out to 2½˝ in propwash and 3½˝ out of propwash. These are MAXIMUM spacings. The faster the aircraft, the tighter the spacing. You can pretend you're doing a P-51 if you wish and use 1˝ spacing. No problem in using tighter spacing anytime. Aerobatic aircraft should always have tighter spacing.

So what you get out of this drill is that on an average wing the first three or four ribs out from the butt rib require 2½˝ spacing since they are in the propwash area. The remaining ribs get rib laces every 3½˝.

**The chart gives us two sets of spacing, but you don't really have to lay out two sets of laces if you choose not to.**

Remember, the spacing you get from the chart is the MAXIMUM spacing between laces. Since there is no restriction on using narrower spacing than the maximum, it's just as easy on most airplanes to use the propwash spacing (2½˝) for the whole wing. It looks neater, it's easier to lay out, and you'll only end up doing a few more laces in the bargain.

**So in our discussion on how to measure and layout the laces, we'll go with 2½˝ laces for the whole wing.**

**Tail Feather Spacing:** If your aircraft requires you to lace the tail feathers, and you don't know the original spacing, use twice the wing propwash spacing.

## Marking Rib Lace Locations

Now that you know the spacing, you'll **measure, lay out, and mark** the position of the individual rib laces. This will result in evenly spaced, neat looking laces. Once you mark the lace positions, you'll pre-punch the lacing holes with a needle to give you guides to lace through. Not only does this give you a good looking job, but saves lots of time by not having to measure while lacing. Pre-punched holes save lots of fumbling.

Put the wing **top side up on the sawhorses.** Get a ruler or a tape measure and a **soft lead pencil.**

**Remember, no pens or magic markers. They will bleed all the way through the paint.**

**You begin measuring rib lace spacing at the butt rib,** working from aft edge of the leading edge fairing, where it meets open fabric, toward the trailing edge. **The first rib lace is always placed at half the required distance of the others.** Since our required distance is 2½˝, half of that is 1¼˝.

❒ Place the tape on the top of the butt rib and start measuring and marking. The first mark goes 1¼˝ back from the leading edge fairing (half the chart distance). The next mark goes 2½˝ beyond that. Keep marking in 2½˝ segments all the way to the trailing edge. Make sure the last mark is no greater than 2½˝ from the trailing edge.

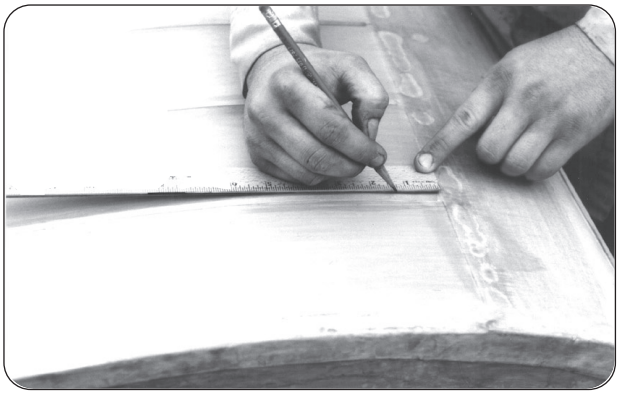

❒ Now lay the measuring tape on the rib closest to the tip bow and do the same thing. Then, to be safe, pick a rib in the middle of the wing and do it again.

❒ Get the chalk line out and line up the marks made on all three ribs. Snap lines on the top of the wing. You should have parallel lines every 2½˝ spanwise on the wing.

Every place the chalk line intersects a rib is where the rib lace will be. This is a nifty way to get nice even laces at the required spacing.

**Rib laces go through the entire wing, and must be parallel to the spar face;** in other words, they should go straight up and down and all be parallel if you looked at them in cross section inside the wing.

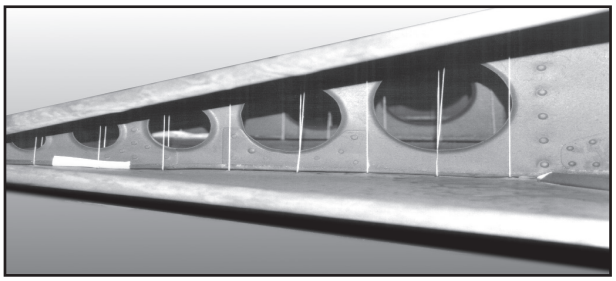

**The bottom surface is different.** If your wing was symmetrical, you could flip it over and measure and chalk the bottom as you did the top. The resulting laces would all be straight up and down and parallel. But most wings have an airfoil shape; that is, the top surface has a greater curve than the bottom surface, which is almost flat. Therefore, the top surface is longer than the bottom. So, if you measured the bottom exactly as you did the top of the airfoil, the resulting rib laces would certainly not be straight up and down and parallel. In fact, they would look like a sunburst! Not to worry.

## The Magic Template

You can keep the laces straight up and parallel by making a **simple cardboard template.**

❒ Hold a piece of cardboard up to the butt rib and trace the shape of the rib. **Also mark on it the position of the main (forward) spar.** Cut out the shape of the butt rib to make a template. Put the template against the butt rib and transfer to the template the spacing marks on **the top** of the butt rib.

❒ Lay the template on something flat. At each

lace position along the top of the airfoil, draw a line parallel to the main spar face, extending down through the bottom of the airfoil template. This gives you the proper positions for the rib laces on the bottom.

❒ Now transfer these lace positions, both top

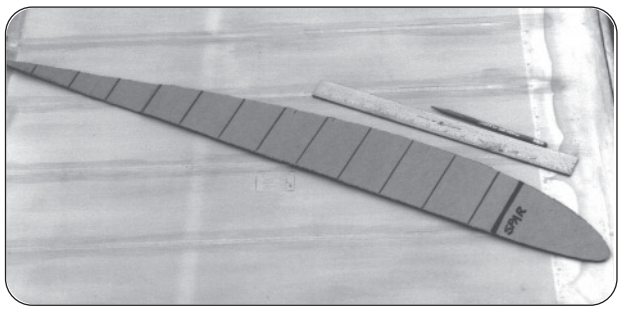


and bottom, to the other side of the template. This gives you a template for both wings.

❒ Place the template back on the butt rib and transfer the marks from the bottom of the template to the bottom of the butt rib.

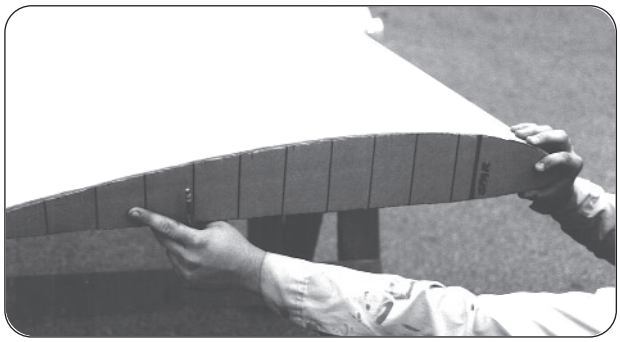

**Turn the wing bottom side up.**

❒ Use the bottom edge of the template to mark the lace positions onto a middle and outboard bottom rib. Snap your chalk lines as before, and you are done. All the rib lacing locations are marked.

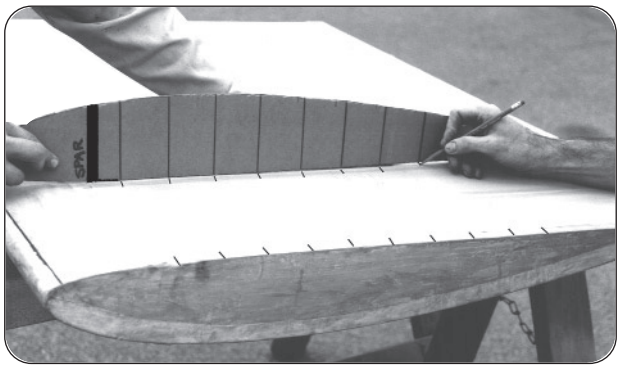

**If you absolutely want to have both in-propwash spacing and out-of-propwash lace spacings, just make two templates. Use them as above.**

## Reinforcing Tape

Reinforcing tape is an adhesive-backed polyester twill material that is stuck to the fabric over the rib cap **before** rib lacing. It reinforces the fabric so that rib laces, screws, or rivets don't cut right through the fabric when mechanical attachments are snugged down.

**Ceconite reinforcing tape** comes in ¼″, ⅜″, and ½″ widths. Use the width of tape that exactly matches the width of your rib cap. Tape that is too wide will leave puckers when the laces are snugged down. Tape that is too narrow will allow fabric cuts where the reinforcing tape ends. Use two parallel ½″ tapes to cover a 1″ rib.

❒ Simply peel off the paper backing and press the tape into position over the bottom ribs. Align the tape precisely with each rib cap. Extend the tape a minimum of 1″ beyond the first and last laces on each rib. For cosmetics, it looks better to extend the reinforcing tape all the way to the leading and trailing edges of the wing.

**Position the wing right side up on the sawhorses.**

❒ Apply reinforcing tape along the top rib caps, just as you did for the bottom rib caps.

**Take care when cutting reinforcing tape. Uneven cuts will show through. Keep everything nice and square.**

**CAUTION: Don't use anything but genuine Ceconite polyester twill reinforcing tape. Substituting fiberglass strapping tape, or any other tape, is not approved. Strapping tape fails easily in shear, and falls apart in a few years. Rib laces can fail if you use strapping tape! It also negates your STC.**

❒ Once all the reinforcing tape is in place, pre-punch the top rib lace holes with a **rib lacing needle.** Punch holes where the chalk lines intersect the ribs, as close to the rib caps and tape as you can.

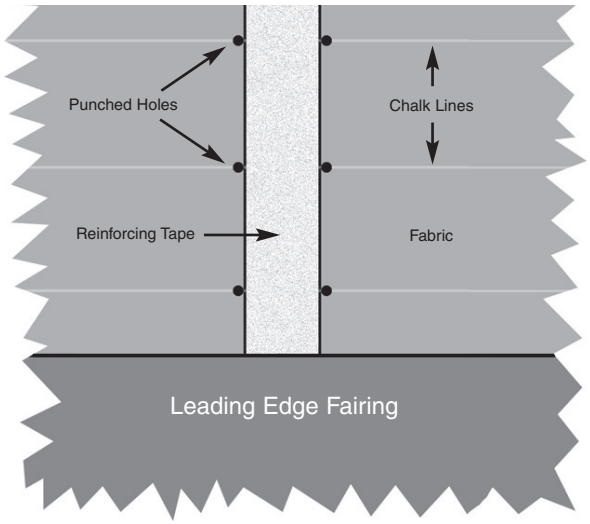

**Turn the wing over again, upside down on the sawhorses.**

❒ Pre-punch the holes on the bottom of the wing, same as on the top.

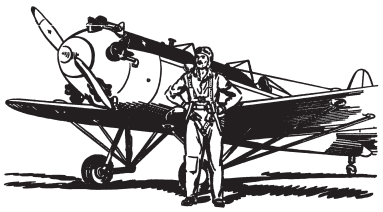

## Let's Tie Some Knots!

There are two kinds of **Ceconite** polyester rib lacing cords, round and flat. It is your choice. Flat rib lacing cord, like a shoelace, takes some untwisting at times. Round cord is faster and only slightly thicker than flat. Rib lacing cord is impregnated with a special wax.

## Only two knots are approved with the Ceconite STC:

1. **The modified seine knot** as shown in AC 43.13. After tying, this old standby stays on the exterior surface. The cord that runs between knots (the continuous cord) also runs on the surface. Leaves a lot of drag on the outside of the wing, but that's the way it was done from WW1 on. Tie this knot with a **12˝ straight needle.**

2. We recommend, and will show you, the **hidden modified seine knot.** This "hidden" knot winds up on the inside of the wing. So does the continuous cord. So all you see with this knot is one small stitch across the rib. Much cleaner. You'll need a **12˝ curved tip needle** to tie and hide this knot.

❖ You can rib lace with the wing on sawhorses and spend a lot of time exercising your knees, or you can put the wing in a vertical stand and pass the needle back and forth with a helper.

❖ Wings can be laced while positioned horizontally or vertically, usually leading edge down. Exceptionally wide-chord wings are easier to lace when positioned vertically, with the needle returned by a helper.

❖ You can start at the leading edge and work aft, or vice versa. You can begin on either the top of the wing or the bottom. It doesn't matter because all the knots will be concealed inside the wing.

❖ To save time untangling long lengths of rib cord and to prevent wearing off the wax coating and fraying the cord by pulling through the fabric too many times, use shorter lengths of rib lacing cord. Six to eight feet is plenty, depending on the rib thickness. Tie off the last knot in each length with a half-hitch.

❖ Make sure all cables are temporarily secured taut, in their normal runs. If you rib lace with them in a loose condition, they could destroy adjacent rib laces when you pull them back to their normal runs as you assemble the airplane.

❒ Set up a floodlight so it shines through the wing to reveal structure and obstacles within.

❒ Thread a **curved tip needle** with about six feet of cord.

**The Modified Seine Knot**

A. Start by inserting the threaded needle into the prepunched hole on the right side of the reinforcing tape. Guide the needle through the wing and out the bottom prepunched hole directly below the top hole.

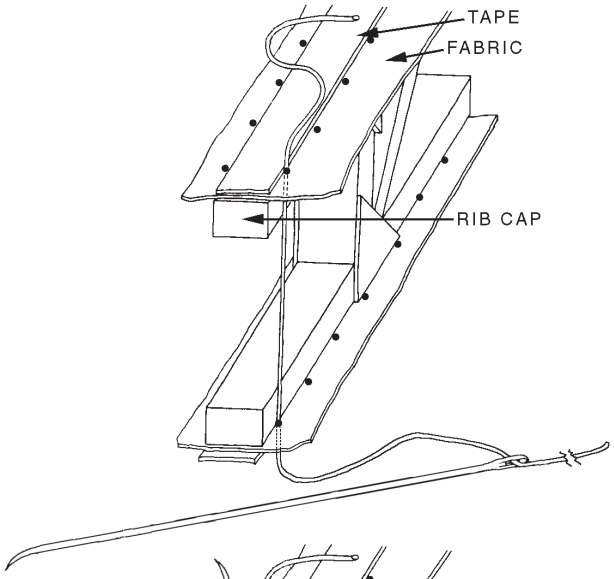


B. Leaving a tail of thread on the top of the wing, pull the needle out the bottom. Cross to the left of the bottom reinforcing tape, insert the needle into the prepunched hole on the left side of the tape. Push the needle and thread all the way back up inside the wing and out through the prepunched hole on the left side of the top reinforcing tape.

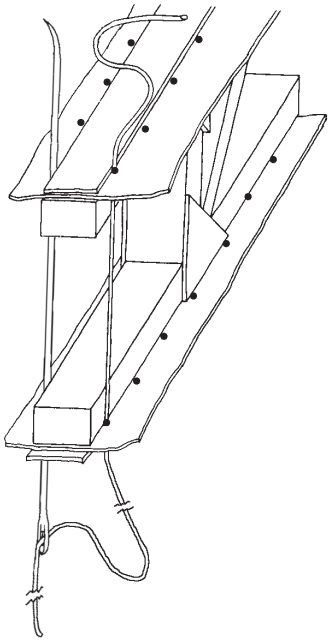

C. Pull the needle out with thread attached, but don't pull all of the thread out. You will have a short end of the thread (about 4 to 5 inches) on the right side of the top reinforcing tape and a lace of thread running from the top through to the bottom on the right of the rib and back up to the top on the left as illustrated.

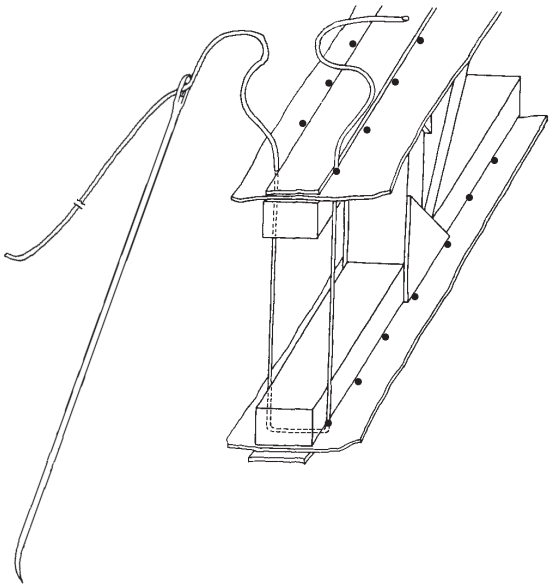

Now you're ready to tie the **Starter Knot.**

**The Starter Knot.** This handy knot is used when you start a sequence of rib lacing. It is simply a square knot with a half-hitch on each side.

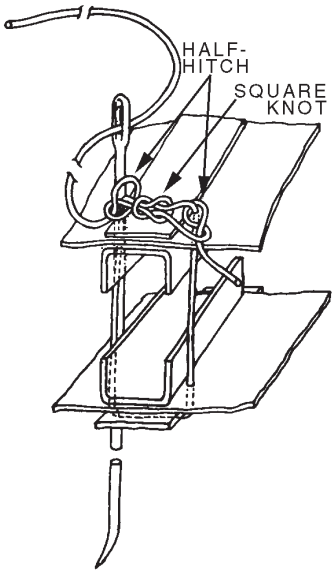


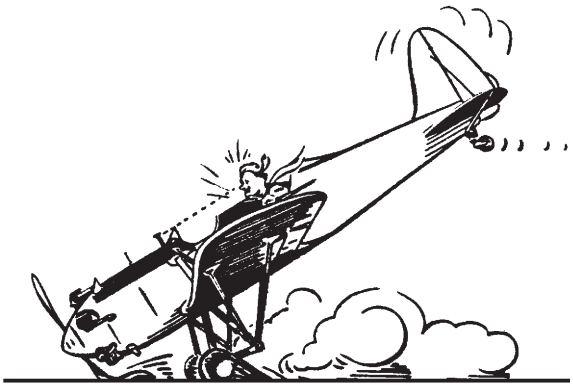

The starter knot can also be used as a single lace in places where you cannot tie continuous seine knots. If you have a lot of time, you could lace your entire airplane with starter knots.

**Ready? We'll begin on the next page.**

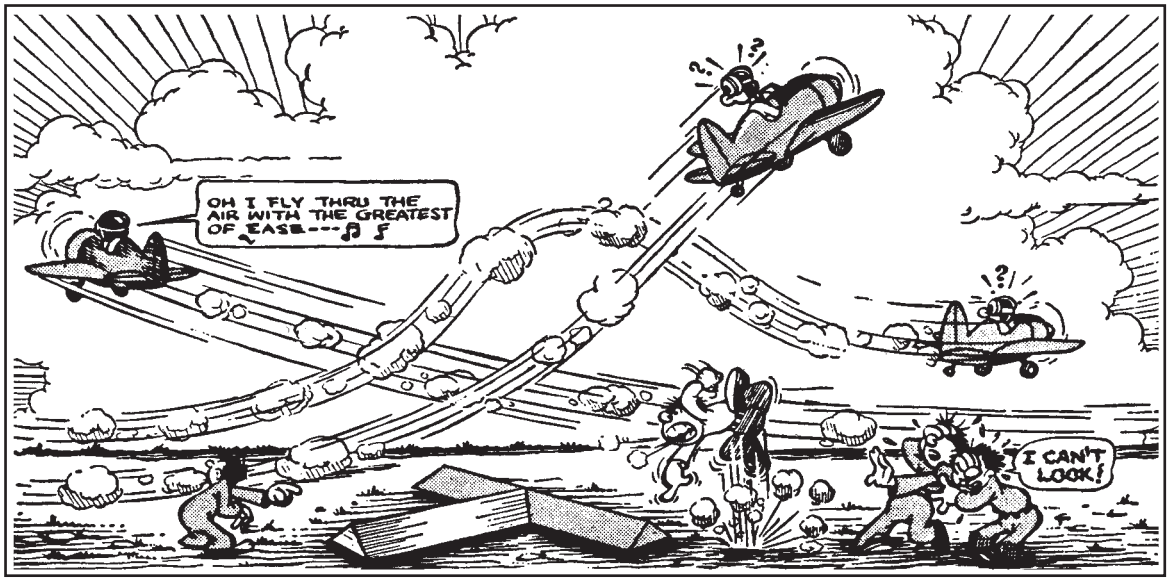

1. Tie a square knot by passing the short end of the cord through the folded-back loop.

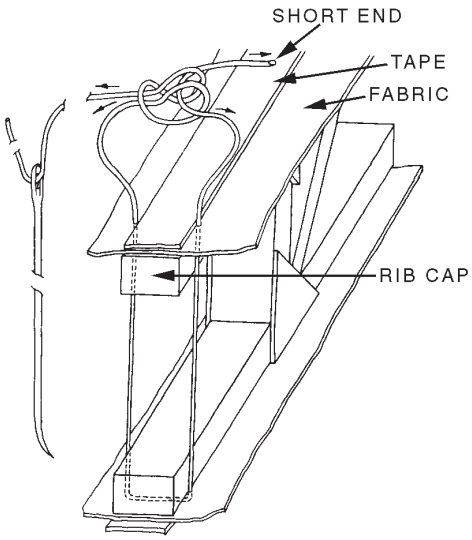


2. Lock the tightened square knot with a half-hitch on each side.

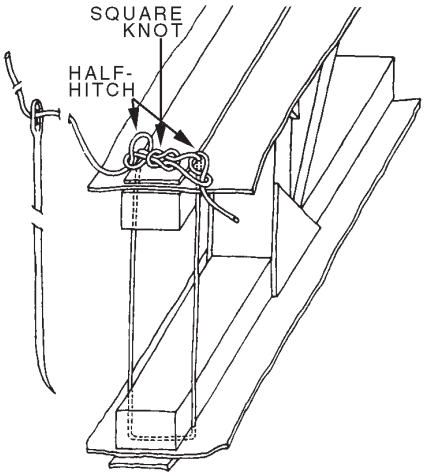


3. Route the needle back through the starting hole. Bring it back out through the next hole aft on the same side of the rib cap. Pull the square knot inside the wing.

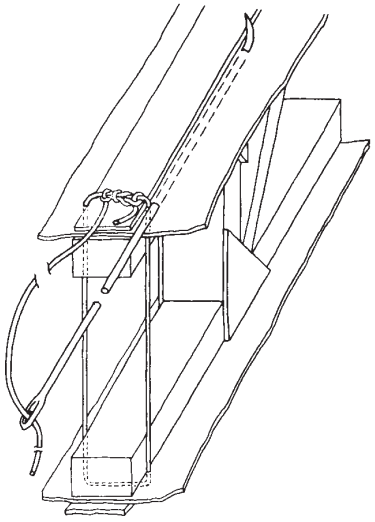

4. Route the needle back in through this same exit hole, and then out again through the corresponding hole on the opposite wing surface. Leave about a 3˝ loop when the needle is pulled clear.

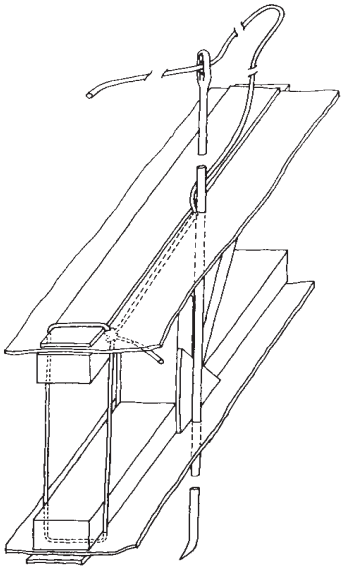

5. Cross over the rib cap, and return the needle. As the needle emerges, orient the loop as shown and pass the needle up through it. This is the beginning of the modified seine knot.

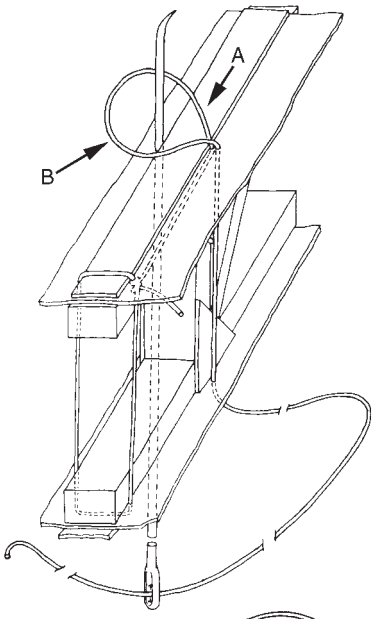


6. Pull the needle clear. Use the tip of the needle to reach under part B of the loop, hook part A, and pull it toward your starting point.

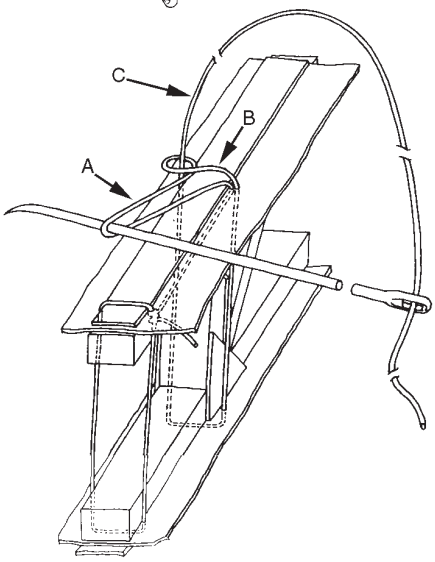

7. Rotate the needle clockwise, twisting the captured part A. Route the needle tip over part A, then under part B.

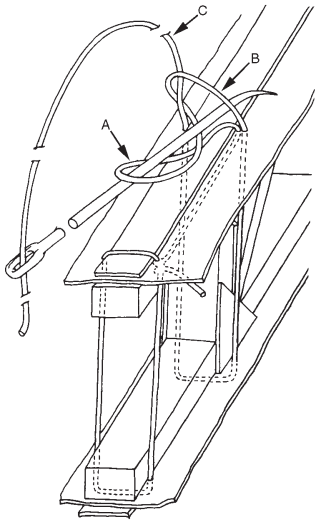


8. Now pass the needle over cord part C and pull it through. Hold part C perpendicular to the fabric while you pull, to keep the cord from getting tangled.

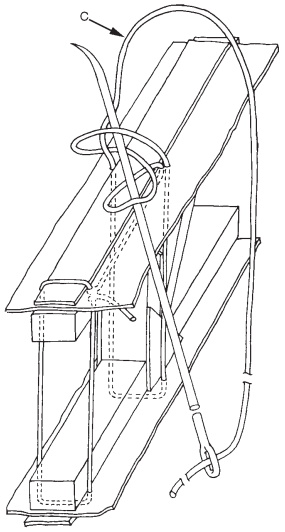


9. Pull part C perpendicular to the fabric to remove all slack in the lacing cord back to the last rib lacing knot, while working the loose knot over to the right side. Do not pull on part D.

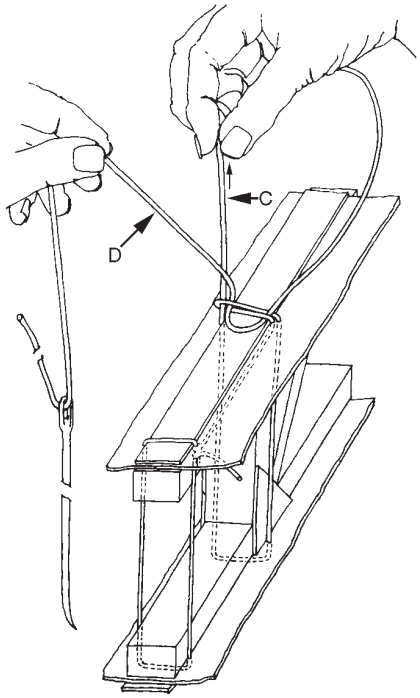

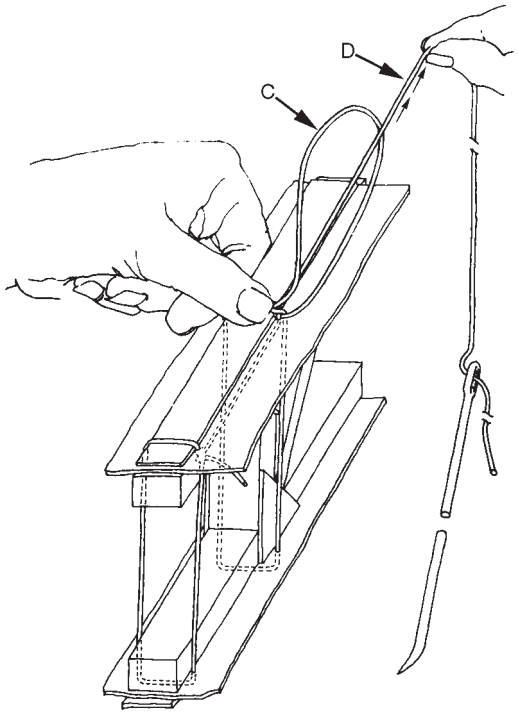


10. With all slack removed by pulling part C, hold the loosely formed knot with your thumbnail. Pull firmly on part D, perpendicular to the fabric surface, to secure the finished knot.

**GO BACK TO STEP 3 -** Repeat Steps 3 through 10 until you've either completed the entire rib or you've come to the end of your length of lacing cord. In either of these cases, go to Step 11.

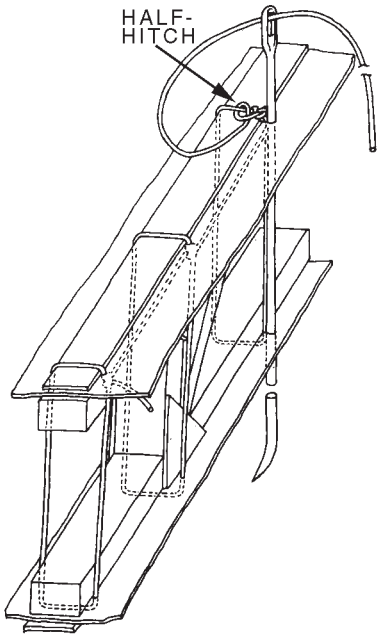


11. After completing an entire rib, tie off the last modified seine knot with a half-hitch.

**What if you run out of cord halfway through the rib?** Tie it off with a half- hitch, and start again at the next set of holes with a starter knot and a new length of cord.

Sometimes you can't get through the entire wing to rib lace normally. Hidden structure, fuel tanks, etc. may preclude lacing around the whole rib.

In this case, you can lace to just the cap. Use a **curved needle** to tie a single starter knot.

A. Go in on one side of the rib cap, and come out on the other.

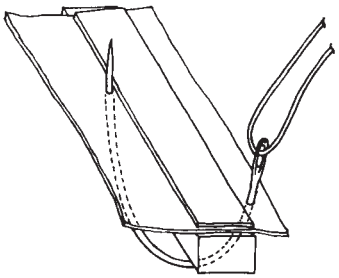

B. Go back in through the exit hole, then come out opposite the first entry hole.

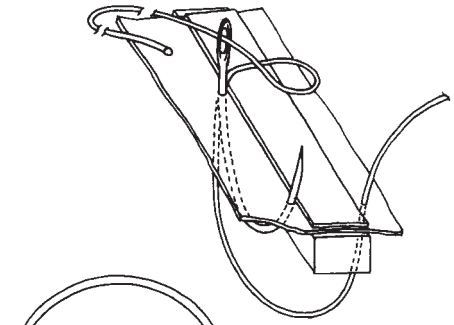

C. Now you can tie a starter knot,

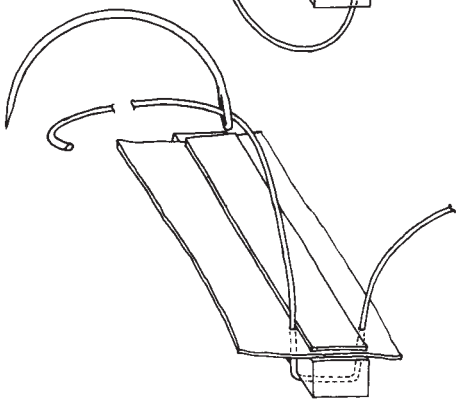

## Other Mechanical Attachments:

**Pop Rivets**
Fabric pop rivets are special broad head rivets sold by aircraft supply houses specifically for use on metal ribs. DO NOT attempt to use the hardware store variety!

Start with the reinforcing tape, as with rib lacing, and use the same spacing. If an existing rivet hole is wallowed out or damaged, drill a new hole half an inch or so away. For best results, use a ½˝ diameter .016˝ aluminum washer under each rivet. Plastic washers tend to crack and fail with age.

Pop rivets are easy to install, but they're a real pain to drill out at re-covering time.

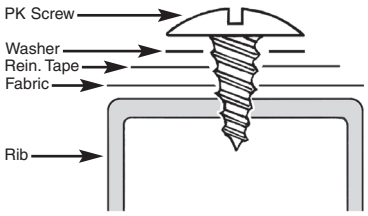


**PK Screws**
These are small self-tapping stainless steel sheet metal screws. You'll find them in a variety of certified aircraft that have metal ribs.

As with the pop rivets, start with the reinforcing tape and use the standard spacing. If an existing screw hole is wallowed out or damaged, drill a new one half an inch or so away. For best results use a ½˝ diameter .016˝ aluminum washer under each **PK screw.**

Don't use **PK screws** on wooden ribs. They can create a path that introduces moisture into the rib over the years.

**Fabric Clips**
Fabric clips are pieces of wire formed into a row of self-locking "barbs" that snap into holes or slots in metal ribs. Taylorcraft and Cessna use them, and they're available from your favorite supply house.

Clips are the hardest on ribs, particularly if someone tries to yank off the old fabric while the clips are still in place. This can easily ruin an entire set of ribs. And because the spacing of the barbs is unchangeable, you can't just drill a new hole to replace one that's damaged. If you need to use clips, find out all you can about your particular clip system before you make an expensive mistake.

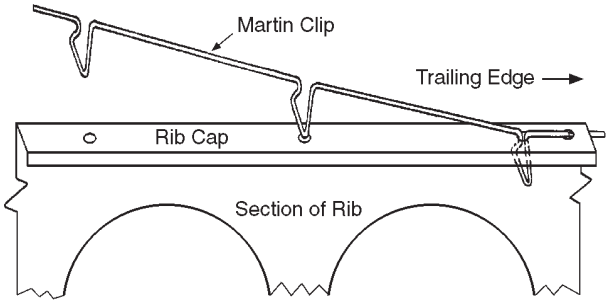


## Finishing Up

When you are finished rib lacing or installing mechanical attachments, you need to clean the ribs of all wax and fingerprints, and fill the reinforcing tapes with **Rand-O-Proof.**

❒ Use some thinner on a clean rag to remove the excess wax that balled up around the rib laces. It does.

❒ Get out your **Rand-O-Proof** can and a narrow brush. Brush **Rand-O-Proof** into the reinforcing tapes until they soak up enough to turn them green and fill them up entirely. It usually takes at least four coats to fill them. A 2˝ brush held sideways works nicely for this job. Be careful about brush marks or ridges that may form at the sides of the brushed area. Feather out ridges before they dry.

**It is important that you fill reinforcing tapes with Rand-O-Proof. If you don't, they act like sponges under finishing tapes, robbing the finishing tapes of the Rand-O-Proof they need for good adhesion.**

## Inspection Hole Reinforcements

It's obvious you'll need access to parts of your airframe once covered. Pulleys, bellcranks, brake master cylinders, and places that require frequent inspection all need to be accessible. You certainly don't want to omit this step and then have to cut into your nice new paint job later.

You need to have a good idea of where these access holes need to be. Studying the old covering before removal is one way, or you could look at a covered airplane like your own and make a "map" of where you need to put the access holes. Shining a strong light through the translucent fabric helps, too. Access holes are usually put on the underside of the wings and fuselage. By the way, it's hard to have too many access holes. Over the years, you'll regret the ones you decide to leave off.

Easy access is achieved through reinforced holes in the fabric, each with a removable cover. CAB plastic reinforcing rings (also called inspection rings) are available from our distributors. They're a standard size: 3⁹⁄₁₆″ ID. This is big enough to get your hand through. The aluminum inspection hole covers that snap over them are also available from our distributors.

Once you've figured out where the access holes should be located, they are simple to install.

❒ Cement the rings directly onto the fabric with straight **New Super Seam** cement. Clean up any cement that drips or oozes with MEK.

**Don't cut out the centers until the airplane is finished and painted. Even then, don't cut them out until you need access. Some may never need to be cut.**

To make sure the rings stay on, you'll apply a **"doily,"** a circular piece of fabric, over each one with **Rand-O-Proof.** To make doilies...

❒ Make a simple frame out of scrap wood, about 3' by 3' square.

❒ Cement or staple some **Ceconite Uncertified Light** fabric to the frame.

❒ Tighten the fabric on the frame at **250°.**

❒ Take the fabric off the frame, and draw **6½″ circles** on the fabric with a **soft lead pencil.** Gallon cans are good patterns. Carefully cut out the doilies with **pinking shears.**

This pre-shrunk **Uncertified Light** fabric makes beautiful smooth doilies that mold easily around the reinforcing rings. If you use thicker scrap fabric that is wrinkled to begin with, it'll look terrible when applied, and you'll have to spend an inordinate amount of time smoothing out the wrinkles.

**Ceconite style Uncertified Light fabric works great for doilies. Ceconite 102 is OK, too, but doesn't mold as tightly.**

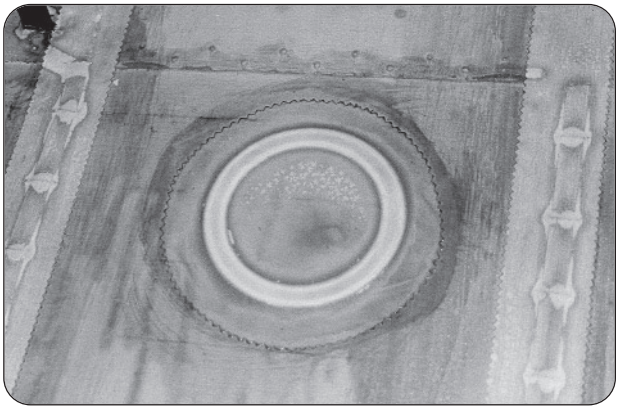

- ❒ Apply each doily by brushing a wet circle of **Rand-O-Proof** inside and outside the ring, big enough to wet out the doily. Lay the doily over the ring. With a dry brush (meaning not much **Rand-O-Proof** on it), work the doily into the wet area. The best bond is achieved when the wet **Rand-O-Proof** soaks upward into the weave of the doily fabric.
- ❒ When the **Rand-O-Proof** dries, brush another coat over it. Be careful not to leave brush marks or ridges.

By the way, buy about *twice* the number of aluminum reinforcing hole covers you need. When you paint your airplane, lay out all the covers and paint them, too. Store the ones you don't immediately use. You'll appreciate having a bunch of spares already painted in future years.

## Finishing Tapes and Gussets

**Finishing tapes** are simply pre-cut strips of **Ceconite** fabric. These tapes are used to cover cemented or sewn seams, or to provide an extra layer of cloth over areas that need reinforcement. **Ceconite** tapes come in two styles, pinked, which are edged in a zig-zag pattern, and straight.

*"Which are better, straight or pinked?"*

OK, let's set the record straight. During WWI, the edges of aircraft tapes were unravelled by hand to leave a crude fringe. The idea was to give a nice transition from fabric to threads to promote adhesion when they were doped in place. But unravelling the edges of the tapes was a real pain and it took a lot of time.

So they got smarter and figured that if tapes were cut with pinked edges, you get the same good adhesion with less labor. Pinking also kept the cotton from unravelling. So pinked tapes came into vogue in the twenties.

Straight-edge tapes came with the introduction of polyester fabrics. Since polyester could be heat slit, it was an easy way to make a tape. The problem with straight-edge polyester tapes is the ridge formed at the edge when they're heat slit. That ridge gives no transition to the tape and, in fact, *promotes* peeling over the years.

Pinked tapes have 41% more edge area to help adhesion. They're cut with a knife that leaves no ridge and, by golly, they are historically correct.

**So we recommend you used pinked tapes whenever possible!**

### Kinds of Tapes

**WEIGHT:** Tapes are available in two weights: **Ceconite Light** and **Ceconite 102,** our medium-weight tape**.** Both are legal to use interchangeably over any of the **Ceconite** fabrics.

Lightweight tapes are easier to bend around corners. They also mold down to the surface more readily than do medium weights. Our **102** medium-weight tapes have more body and are appropriate for working airplanes or those that will see a lot of snow or ice.

**CUT ANGLE:** There are straight-cut and bias-cut tapes. **Straight tapes** are self-explanatory. They are long, straight strips of fabric. Some catalogs call them *linear.* **Bias tapes** are cut from long tubes of sewn fabric. The weave of a bias tape is aligned at 45° from the edge. If you pull the bias tape, it gets narrower, like the old Chinese finger puzzle, and forms itself perfectly around curves with no wrinkles. Bias tapes are used ONLY to go around curves like rudders or wing-tip bows.

**WIDTH:** Tapes come in a variety of widths, all with different uses.

**Straight Tapes -**

❖ 2″ tapes are the standard width for ribs and longerons. You can use 2″ tapes legally on the whole airplane, but it looks pretty strange. Anyway, you'll use a lot of 2″.

❖ 1″ tapes are used for narrow fuselage stringers.

❖ 3″ tapes are used for leading or trailing edges of wings and tail feathers.

❖ 4 or 6″ tapes are used for leading edges of wings.

**Bias Tapes -** This is tricky, when you pull a bias tape around a curve, it gets about ⅓ narrower.

❖ A 3″ bias will pull to 2″ wide when applied.

❖ A 4″ bias will pull to slightly less than 3″.

**DO NOT ATTACH TAPES WITH NEW SUPER SEAM! New Super Seam cement dries too brittle for a flexible bond on tapes. Tapes should be attached only with G-6302 Rand-O-Proof or one of our other nitrate dope products. Old timers will tell you to add fabric cement, like New Super Seam, to Rand-O-Proof or the other nitrate dopes to improve tape adhesion. Don't do it! This is an outdated method that actually will cause early tape delamination rather than promoting adhesion. Use nitrate Rand-O-Proof thinned one to one with 286 Nitrate Thinner. Period!**

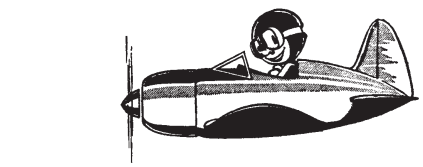

## Let's Tape!

**Tapes are applied in this order.**

1. Fabric gussets.

2 Tapes that are oriented CHORD-WISE into the slipstream (like tapes over ribs).

3. Tapes that are oriented SPAN-WISE across the slipstream (like leading edge tapes).

## The Three Basic Steps in Taping:

1. Thin the **Rand-O-Proof** one to one with **286 Nitrate Thinner**. Precoat the fabric with **Rand-O-Proof** where the tape will be. Let it dry.

2. Install the tape with a very wet coat of one-to-one **Rand-O-Proof.** Let it dry.

3. Brush a final coat of **Rand-O-Proof** over the dry tape.

**Make sure you feather out any ridges or built-up edges of Rand-O-Proof. While still wet, brush them out quickly, being careful not to leave any brush marks. All ridges and brush marks will always show.**

## Fabric Gussets

A fabric gusset is simply a piece of pre-shrunk fabric cut to shape to fit over any oddly shaped place you want to reinforce.

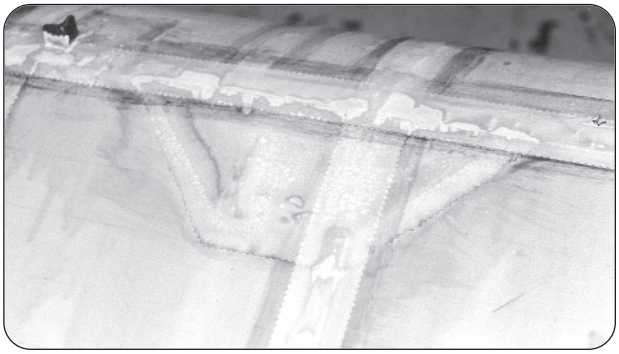

An example would be a gusset cut to fit over a strut fitting protrusion. This gusset would have a neat hole trimmed exactly to go over the end of the protrusion. The gusset, however, would be big enough to cover the elongated hole left in the wing fabric after heat tightening around the base of the protrusion.

Or you might choose to cut a custom-shaped gusset to cover an odd shaped hard panel underlying the fabric. Sometimes it's easier to cut gussets than to try to make tapes work over odd shapes.

Remember the previous section on installing reinforcing rings? Smooth, professional gussets are cut from pre-shrunk **Uncertified Light** fabric exactly like inspection ring doilies.

❒ Hold the pre-shrunk fabric over the area you want the finished gusset to cover. Trace the shape with a soft lead pencil and a straight edge. Oversize the gusset at least ⅜˝ beyond its perimeter.

**A gusset or tape that is used to reinforce a hard surface underneath fabric needs to have at least 3⁄8˝ extending past the edge of the hard surface onto the adjacent fabric. After all, the reason to put a tape or a gusset over the hard surface is to keep the edges of the hard surface from chafing through the fabric. You need at least 3⁄8˝ of fabric overlap for a good Rand-O-Proof cement bond.**

❒ Trim with pinking shears and attach with **Rand-O-Proof,** as you did with the doilies.

❒ Brush a wet coat of **Rand-O-Proof** and lay the gusset into it. Work out bubbles with a dry brush.

## Chord-Wise Tapes

Let's put on the tapes over wing ribs.

❒ Get out the **Rand-O-Proof** bucket and fill it with **Rand-O-Proof,** thinned one to one. You will use only a 2˝ brush for taping.

**Pre-coating, the hidden secret to adhesion.** Before you lay any tapes, make sure you brush a stripe of **Rand-O-Proof** over the area where the tape will go. This pre-coating insures that there'll be enough dope to give a good stable bond between the tape and the fabric. Use a 2˝ brush. Make sure you don't leave a ridge of **Rand-O-Proof** at the edges.

❒ For a first-class job, draw lines with a pencil and straight edge in the areas where the tapes are to be applied. This not only gives you a reference line to tape to, but a guide for putting down a neat pre-coat of **Rand-O-Proof.**

**You have two options when trimming and applying rib tapes.**

1. You can use one tape long enough to wrap around the whole wing, top and bottom.

2. Or you can cut separate bottom and top tapes and butt them together at the leading edge.

**Let's do one of each.**

**One-piece Finishing Tape**

❒ Cut a 2˝ tape long enough to hang over the trailing edge an inch or so, wrap around the whole wing, and have some extra extending past the bottom trailing edge.

The plan is to attach the tape to the top of the wing first. At the leading edge, roll up the excess tape and clip it with a clothespin to keep it off the ground. Later, when you turn the wing over, you'll unroll the tape and **Rand-O-Proof** it to the bottom.

❒ To apply the tape, brush a very wet stripe of **Rand-O-Proof** over the area we previously precoated. It helps to have those straight pencil lines as a guide.

Don't skimp on the **Rand-O-Proof.** You have to work fast, yet get a lot on. If you're working by yourself, you might consider giving yourself more time by brushing only as far as you can reach and apply the tape in stages. Most of the time, however, you should be able to do the whole top section of the tape if you work fast.

❒ Lay the tape into the wet stripe of **Rand-O-Proof.** It should immediately soak up into the tape. Wipe the brush dry and use it as a tool to press the tape into the stripe of **Rand-O-Proof.** The dry brush can also be used to work out any big bubbles. Work fast and get the brush out of there before the **Rand-O-Proof** starts to dry. If you fiddle with it too long, you'll leave noticeable brush marks.

*"OH NO! There are bubbles around the rib laces! I can't get all the air out! It didn't form down over those areas! Before I could work them all out, the Rand-O-Proof dried!"*

Don't panic. This is perfectly normal. What appear to be air bubbles over the rib laces (or rivets or screws) are really the natural fairing tendency of the tape as it angles off the protrusion of the lace. You'll never get all these faired areas perfectly cemented down in the **Rand-O-Proof.** People go to great lengths to try to get these "bubbles" out, but to no avail. Don't worry about them. When the **Silver Butyrate Dope** covers them later, you'll never know they were there.

**What *is* important is to make sure that you have at least ⅜″ to ½″ of the edge of each tape firmly wetted out and cemented with Rand-O-Proof. From the pinked edge in, the first ½″ of the tape should look green and well attached with no dry areas or voids.**

**You'll always have some wrinkles or bubbles in tapes when you apply them.** Don't worry, they will ALL come out later with heat from your iron.

**Don't fiddle around with small wrinkles or bubbles in the wet tapes. You're bound to leave brush marks. We'll fix them all later with the iron.**

As the **Rand-O-Proof** dries, it will no longer look uniformly green under the tape. **Rand-O-Proof** dries with a mottled, splotchy look. Perfectly normal. If you started with a really wet layer of **Rand-O-Proof,** you did it right.

❒ As you did on the top, brush a very wet stripe of **Rand-O-Proof** onto the previously precoated areas, unroll the tapes, and apply them to the bottom of the wing.

❒ Also as with the top of the wing, lay the tape into the wet **Rand-O-Proof.** Use the brush to press the tape into the **Rand-O-Proof.** Work fast and get the brush out of there before the **Rand-O-Proof** starts to dry.

You may notice some wrinkles in the tape as it wraps around the leading edge. This is really quite apparent on tapered-wing aircraft. Again, don't fiddle with them now. The iron will smooth them out later.

**Two-piece Finishing Tape**

A two-piece tape is butted together at the leading edge.

❒ The easiest way to do this is to apply all the tapes on one side with a bit of overhang at the trailing and leading edges. A good guide for the overhang at the leading edge is your old wing center chalk line you used when you applied the wing fabric. Apply the tapes so they are cemented slightly past this line with about an inch of dry tape overhanging to use as a handle.

❒ Trim the tapes on the wing center chalk line with a fresh straight razor. Remember, hold the razor firmly on the line, and pull the tape into the blade. **Don't slice with the razor or you'll cut the fabric below!**

❒ When you apply the tapes on the other side of the wing, trim them the same way. This neat butt seam will never show when the leading edge tape is placed over it.

❒ Trim the trailing edge tapes by cutting them off flush at the trailing edge when they're dry.

❒ After 30 minutes or so, when all the tapes are dry, brush another coat of one-to-one **Rand-O-Proof** over them. Watch out for brush marks and be especially careful not to let noticeable edge build-ups of **Rand-O-Proof** occur. Feather out **Rand-O-Proof** edges with the brush before they dry.

## Span-Wise Tapes

The long tapes over the leading edge, trailing edge and spars go on next. Here's a span-wise tape installed along a spar.

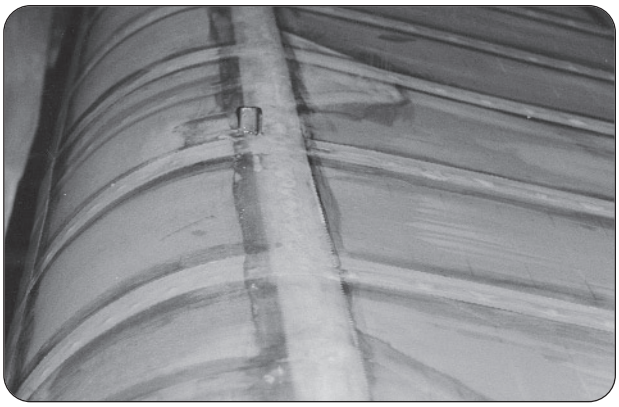

❒ First, smooth out all imperfections where the long tapes will lie with a **225°** iron. Glue lumps, fabric wrinkles, and other ugly spots will all iron out with enough patience and pressure from the tip of the iron. Don't get lazy here and decide that since another tape is applied over imperfections that they won't show. Trust me! They most assuredly will. Now is your chance to get them out!

**Long tapes should never be aligned by eye. Use a chalk line. Straight tapes are the trademarks of good workmanship.**

❒ **Pre-coat** and apply long tapes just like all others. Brush an additional coat over them when they're dry.

**Leading edge tapes are Rand-O-Proofed to the wing in two operations.**

❒ Precoat the leading edge with your thinned **Rand-O-Proof,** making a nice wet stripe that extends 2˝ above the center line and 2˝ below it. Your 4˝ finishing tape will be set into this stripe.

❒ When the **Rand-O-Proof** dries, snap a fresh chalk line along the leading edge, 2˝ above the center line.

❒ Brush more **Rand-O-Proof** *only* onto the area between the center line and your new upper chalk line. Leave the area below the center line dry. If you're working by yourself, do only 2 or 3 feet at a time. Don't rush. Remember, Ol' Cyrus is gonna sight down every one of your tapes!

❒ Align the upper edge of the tape with the new chalk line as you work it into the wet **Rand-O-Proof.**

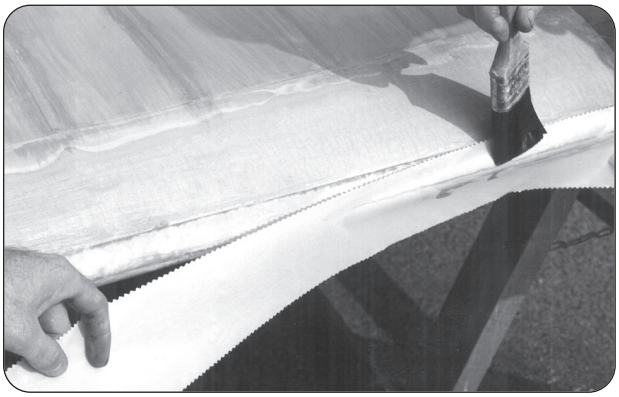

**NEVER USE AN IRON HOTTER THAN 225° ON A TAPE! Tapes are raw fabric and are not pre-shrunk. If you so much as touch them at 250 degrees, they will shrink about 5%. The end result will be a curved tape. UGLY!**

❒ When the entire upper half of the leading edge tape is attached and dry, heat-form the tape by rolling it around the leading edge with a **225° iron,** working the lower half into the **Rand-O-Proof** precoat.

❒ Apply a wet stripe of **Rand-O-Proof** to the lower leading edge. Work the tape you just heat formed into the **Rand-O-Proof** with a dry brush.

❒ Finally, brush another coat of 1-to-1 thinned **Rand-O-Proof** over the entire tape. Watch out for brush marks and be especially careful not to let noticeable edge build-ups of **Rand-O-Proof** occur.

**The trailing edge tape is installed in the same manner, using a chalk line to keep it nice and straight.**

## Bias Tapes

Let's put a bias tape over the curved wing tip bow.

We'll assume you used a 4˝ tape on the leading edge and a 3˝ tape on the trailing edge.

Remember, a bias tape shrinks about a third when it's pulled. So to plan professional join-ups with the leading and trailing edge tapes, do it this way.

Start by butting or overlapping the leading edge 4˝ tape with a 4˝ bias tape. When we pull the bias, it will shrink to about 3˝ to match the 3˝ trailing edge tape.

❒ Roll out enough bias tape to curve around the entire tip bow. Bias tapes have sewn seams about every 5 feet, so cut your tape off the roll right after a sewn seam to give you a full 5 feet before another seam appears. Lay the bias tape out on the workbench, and **with a soft lead pencil** draw an exact centerline along its entire length.

3. Brush a final coat of **Poly-Brush** (3-to-1) over the dry tape.

**Make sure you feather out any ridges or built-up edges of Poly-Brush. While still wet, brush them out quickly, being careful not to leave any brush marks. All ridges and brush marks will always show.**

## Fabric Gussets

A **fabric gusset** is simply a piece of pre-shrunk fabric cut to shape to fit over any oddly shaped place you want to reinforce.

An example would be a gusset cut to fit over a strut fitting protrusion. This gusset would have a neat hole trimmed exactly to go over the end of the protrusion. The gusset, however, would be big enough to cover the elongated hole left in the wing fabric after heat tightening around the base of the protrusion.

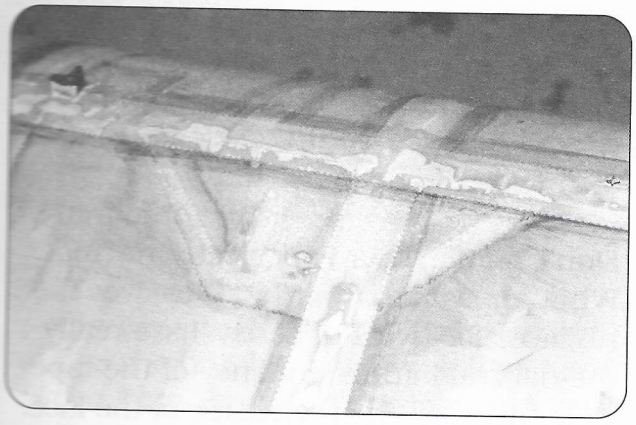

Or you might choose to cut a custom shaped gusset to cover an odd shaped hard panel underlying the fabric. Gussets are sometimes easier to cut than trying to make tapes work over odd shapes.

Remember the previous section on installing reinforcing rings? Smooth, professional gussets are cut from pre-shrunk **Uncertified Light fabric** exactly like inspection ring doilies.

❒ Hold the pre-shrunk fabric over the area you want the finished gusset to cover. Trace the shape with a **soft pencil** and a straight edge. Oversize the gusset at least ⅜″ around its perimeter.

**A gusset or tape that is used to reinforce a hard surface underneath fabric needs to have at least ⅜″ extending past the edge of the hard surface onto the adjacent fabric. After all, the reason to put a tape or a gusset over the hard surface is to keep the edges of the hard surface from chafing through the fabric. You need at least ⅜″ of fabric overlap for a good Poly-Brush cement bond.**

❒ Trim with pinking shears and attach with **Poly-Brush**, as you did with the doilies,

❒ Brush a wet coat of **Poly-Brush**, and lay the gusset into it. Work out bubbles with a dry brush.

## Chord-Wise Tapes

Let's put on the tapes over wing ribs.

❒ Get out the **Poly-Brush** bucket and fill it with **Poly-Brush**, thinned three to one. You will use only a 2″ brush for taping.

You can prevent early paint cracking by using wider tapes in the slipstream area or, in some cases, double taping.

If you have any questions about your specific hot rod, call us at the factory before you tape. We can give you some suggestions to prevent early paint cracking.

### Sun Shrinking

If you plan to paint your airplane black, olive drab, or any really dark shade, you may have a real problem with the tapes shrinking in extreme temperatures when left outdoors. Remember, tapes are made from raw fabric with no pre-shrinking. Lightweight tapes are particularly susceptible to this if they don't get enough **Rand-O-Proof** when applied.

The dark shades of paint can generate skin temperatures as high as 210° on a desert ramp. This is not a big problem in Boston, but if you live in Phoenix, pay attention. Light colors don't have this problem.

The best prevention is to use plenty of **Rand-O-Proof** when you apply the tapes. Pre-coat, apply with ample **Rand-O-Proof,** then apply another coat over the top. This usually keeps the tapes where they belong for their entire service life, no matter what color you paint your airplane.

Another trick is to pre-shrink the tapes at 250° before you apply them. You only need to do this for surfaces exposed to direct sunlight, and it is probably overkill, but you are going for perfect, right? Tension the tapes by clamping them to the workbench and iron them over smooth cardboard. If you don't tension them while pre-shrinking, they'll wrinkle and deform.

**OK... back to work.**

## Drain Grommets

Airplanes get water in them, and that water needs to get out. Rain and condensation can introduce significant moisture into a tube and rag airplane.

Each bay of a wing, tail feather, or fuselage must be allowed to drain. Look at the structure and think about where water will collect. Common sense will tell you where the drains should go. Put a drain hole at the lowest point of each collection bay on the bottom of the surface. Most wings, for instance, will have a drain next to the outboard side of a rib at the trailing edge in each bay. Some wings have a drain hole on each side of the rib at the trailing edge.

Drain holes need to be at least ¼″ in diameter. They are usually reinforced by cementing a drain grommet directly over the fabric then cutting or melting out a hole.

Use only **New Super Seam** cement to apply drain grommets.

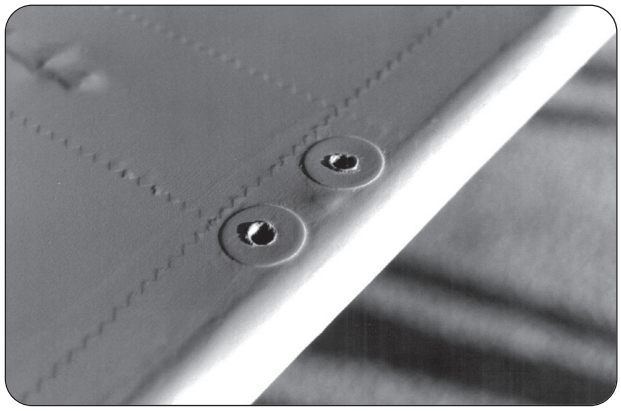

You can make a mini-doily about 2″ in diameter called a dollar patch, and apply these over the drain grommets. Cut them out with pinking shears. This is a good idea in propwash areas. Melt out the center with a soldering iron when the dollar patch is dry over the drain grommet.

**Drain grommets come in three types:**

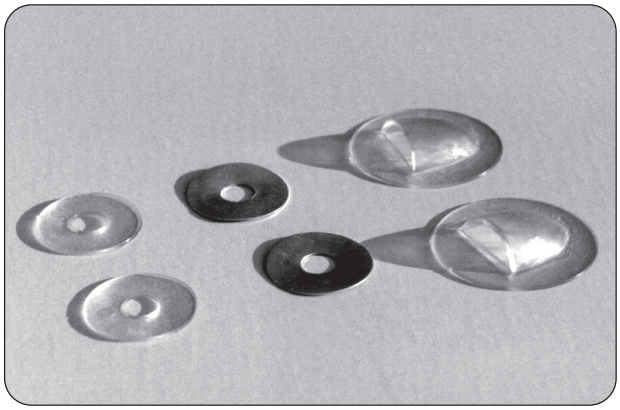

1. **Plastic grommets.** These glue well but can get brittle over the years.

2. **Aluminum grommets.** These will have the longest service life but need dollar patches in propwash areas.

3. **Seaplane grommets.** These are plastic and have a little vented hood over them that helps siphon water out. To install them, melt the hole FIRST, then glue on the seaplane grommet. PLACE THE OPENING AFT! If you use dollar patches, be sure to cut holes for the vents.

Our STC allows for **melted holes** alone with no drain grommet. The only stipulation is that the melted drain hole needs to go through TWO LAYERS of fabric: that is, fabric with a tape over it. Handily, most of the areas you want to place a drain hole have tapes over them. Use a metal drain grommet as a melting guide to insure a smooth, even hole.

## Heat Smoothing

Pinked tape edges will often curl up when the **Rand-O-Proof** dries. To lay them down, **use a 225 degree iron** and physically heat-form them flat. Pressure and heat will push the curled edges back down. Take your time on all the tapes; the hours you spend with the 225 degree iron will save lots of sanding later.

### Imperfections You Should Fix

❒ **Wrinkles.** Press with the tip of the iron really hard. Even those little crease wrinkles can be smoothed out.

❒ **"Bubbles,"** or areas in tapes and fabric that don't appear to be well stuck down. **225°** works well at heat forming the bubbles flat.

Test it with your finger after you iron it flat. It should be firmly stuck down. Remember, don't worry about the natural fairings around rib laces. They only look like bubbles. Don't waste your time ironing them; you will never see them when the silver butyrate is applied.

❒ **Lumps. New Super Seam** sometimes balls up into lumps when it dries off the brush as you apply it. Use heat and pressure to re-soften and smooth out the lumps left from the cementing stages.

❒ **Curled-up Pinks on Tapes.** Pinked "ears" will often curl up when the **Rand-O-Proof** dries. Iron them flat with the 225° iron. They will heat-form and lay flat and smooth. Iron them now and you won't have to sand them later. Go over EVERY tape for a nice job. Let your fingers tell you when they are nice and smooth. **REMEMBER, NO MORE THAN 225° ON TAPES OR THEY WILL LOOK LIKE COKE BOTTLES.**

### Some Other Tricks

If you were sloppy with the **Rand-O-Proof** and have a lot of dried drips or runs, use some **286 Nitrate Thinner** on a rag to wipe them off now. You can do the same to level really big ridges of **Rand-O-Proof** next to the tapes. Don't use MEK; it is a bit too powerful and could take off all the underlying **Rand-O-Proof.** Be careful

how much thinner you use and how hard you wipe. You could wind up plowing rag marks into the surface if you get too aggressive.

Do all the heat smoothing you possibly can now. Once we start spraying, it'll be too late. Don't rush! This is your opportunity to do it right.

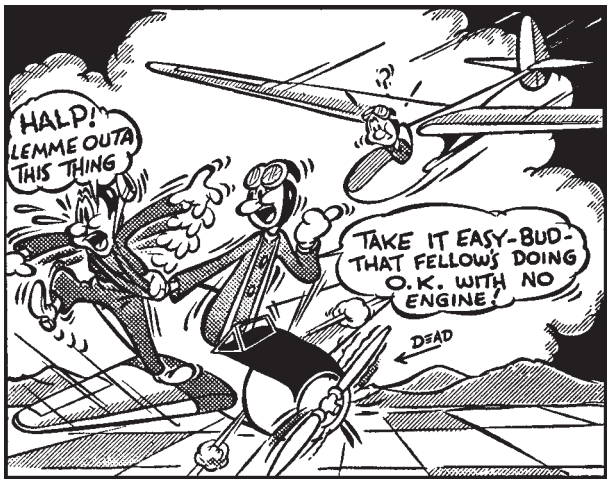

# 6 – Control Surfaces & Fuselage

## Ailerons

Ailerons are really just little wings, so nothing is different except that their narrow width gives you the option to use one piece of fabric instead of two.

Start by cementing the fabric to the trailing edge; then wrap it across the bottom, all the way around the leading edge, and back to the trailing edge. Cement it with a 1˝ overlap at the trailing edge, as you did on the wing itself.

You don't need to cement the fabric to the leading edge; there's no seam. The fabric will be plenty stable when you heat-shrink it and apply a coat of **Rand-O-Proof.** You'll find that the **Rand-O-Proof** will soak through the fabric on the leading edge and produce a cementing effect similar to **New Super Seam.**

## Tail Feathers

Elevators, rudders, and stabilizers are covered the same basic way you covered the wing, except **you'll use 1˝ fabric-to-fabric overlaps everywhere.**

Most tail feathers are made of tubing. Most of these tubes are ¾˝ or thicker. All overlaps will be done over this tubing. Depending on the width and shape of your tail feathers, you can cover them with one or two pieces of fabric. We'll discuss using one piece of fabric for each tail feather part. Using two pieces is done just the way you did the wings.

### Let's Take It Step by Step

Each of the tail feather components has a straight edge with hinges sticking out from it.

**We'll use an elevator as an example.**

❒ Start by laying out flat on a large work table enough fabric to cover the elevator. Rest the elevator on its straight hinge edge in the middle of this fabric, with its trailing edge sticking straight up in the air. The idea is to

make a "clamshell" of fabric that will close over both sides of the elevator, pivoting on the leading edge tube. **Using a soft lead pencil,** carefully mark the hinge areas on the fabric.

❒ Remove the elevator, and make small cuts in the fabric at the marked locations to allow the hinges to stick out through the cuts. This allows the fabric to lie flat along the leading edge tube. Cement the fabric to the leading edge tube.

❒ Heat-form the bottom fabric around the tube

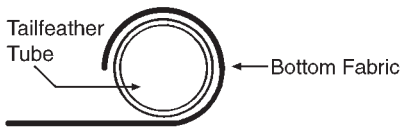

before you cement it, providing at least a 1˝ overlap area, exactly as you did with the wing tip bow. Doing the bottom first will leave the trimmed edge of the top fabric down low where it won't show as much later.

**Remember to leave about an inch slack in the fabric.**

❒ Brush **New Super Seam** onto the tube where fabric will attach, then lay the fabric into the wet cement. **Use a squeegee to force the cement up through the fabric until it wets out the surface.** Make sure it penetrates the fabric. If you can, form and cement the fabric even further into the inside of the tube, as the illustration shows. This way, even more of the seam will be hidden.

❒ **Trim this seam neatly** with straight lines and no ravels. Clean up any excess **New Super Seam** spills or oozes with MEK.

❒ Once you have one side heat formed, cemented, and trimmed, smooth up the cemented area with a **250° iron.**

❒ Heat-form the top part of the fabric around the tube and cement it as shown in the next drawing.

Leave at least a 1˝ overlap over the first piece.

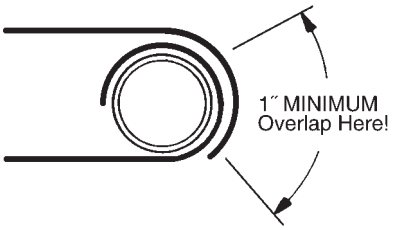


❒ **Trim this seam neatly with good sharp scissors.** Don't use the razor blade here. There's too much chance of slipping and cutting the layer of fabric beneath. Make your trim cuts nice and straight leaving no raveled edges.

**Don't forget! A New Super Seam bead works well before trimming your cut line.**

❒ **Cement the top fabric into place.** Clean up any excess **New Super Seam** spills or oozes with MEK.

❒ **Cover the overlap with 3˝ tape. Use bias tape on curved areas.**

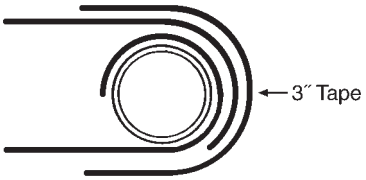


**Again, pre-coating is the secret to adhesion.** Before you lay on any tapes, **brush a stripe of Rand-O-Proof** over the area where the tape will be applied. Use a 2˝ brush. Make sure you don't leave a ridge of **Rand-O-Proof** at the edges. **Let this dry for 15 minutes.**

When your 3˝ tape is ready to install, **brush a very wet stripe of Rand-O-Proof** over the pre-coated area. Don't skimp on **Rand-O-Proof.** Work quickly. You may find it best to work in sections, applying only as much **Rand-O-Proof** as you can get the fabric into before it dries.

**Lay the tape into the wet Rand-O-Proof.** Wipe the brush dry and use it as a tool to press the tape into the stripe of **Rand-O-Proof.** The dry brush can also be used to work out any big bubbles.

Work fast and get the brush out of there before the **Rand-O-Proof** starts to dry.

## Fuselage

You absolutely need some safe, reliable means of turning the fuselage while you're covering it. The sawhorses aren't recommended for this, especially if you're going to use an envelope. More about this later.

Build this handy fuselage turning jig we showed you earlier in the manual. As you can see, it's just 2-by-4s, and it bolts right to the firewall. It can be turned to give you access to all sides of the fuselage. Use this jig with a padded sawhorse to support the tail.

There are two main methods of covering your fuselage – the **blanket** and the **envelope.** We'll discuss both.

### Option One: Blanket Method

The term "blanket" simply means a rolled-out length of fabric. It can be all one piece, or two or more pieces sewn together.

Once again, you'll use the same basic procedures you used on your wings and controls to cover the fuselage. But unlike the wings and control surfaces, there are wide variations in fuselage designs, and that calls for careful planning if you're going to use the blanket method.

Think of the fuselage as a series of flat planes. After all, to this point, that's pretty much what you've been covering on the rest of the airplane.

The basic idea is to cover those flat planes by rolling out fabric in a series of blankets joined by 1˝ overlap cemented seams. Since a fuselage is usually made of tubing, most of your seams will be done exactly as was described in the tail feathers section.

There are some constants to keep in mind when you make your plan:

1. The fabric is **70˝ wide.** That is the maximum "reach" of the fabric you have to play with.

2. The fabric can only be joined with a cemented seam **over structure.**

**"Structure" in a fuselage is defined as longerons or cross tubes only. Formers and stringers don't count.**

**Look at this uncovered J-3 fuselage.**

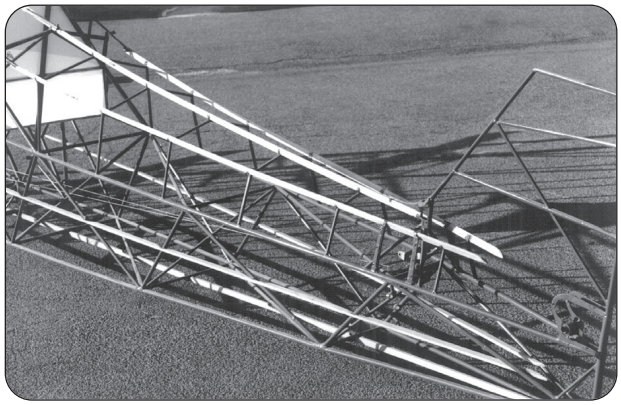

Notice the three wooden stringers on the top of the fuselage aft of the cabin. You can't create cemented seams over those stringers.

So you'd get out your tape measure and see where 70˝ fabric would reach between real structures, in this case the longerons. It turns out that there are four longerons stretching down the longest part of the fuselage in a box structure. Cutting to the chase, you would plan to cover the fuselage in three main sections: the top and two sides – from longeron to longeron. A separate belly piece should be attached first, wrapping around the two lower longerons.

Luckily, some airplanes have a real structure tube running right down the spine of the fuselage from the cabin to the vertical fin. That makes it easy. Here you can start with a 1˝ overlap over the spine tube, and then use two 70˝ pieces of fabric, one for each fuselage side. These two pieces drape from the center spine tube down each side, and wrap around the lower longerons.

OK... so much for planning. Let's talk about some unique things about cementing fabric to a fuselage.

Imagine that you're installing a piece of fabric straight down a slab-sided fuselage. You roll out the fabric, clamp it in place, and begin gluing.

But where do you start? You start at the front, and work aft. You begin cementing at a cross tube up by the firewall, or perhaps where the boot cowl will end. The way you cement fabric to this tube is different and critical. Here, it is impossible to have a fabric overlap. There will be nothing to overlap it with. You are at the start point, so this cement bond has to be extra strong.

To make it so, scuff-sand the primer or paint, then **pre-coat** the tube with one coat of **New Super Seam** and let it dry. Then **heat-form** the fabric carefully around the tube to get as much fabric as possible wrapped around that tube. Trim and cement it.

**Use this procedure for all your front tube starting places. In fact, you should pre-coat all longerons and tubing that will have a wrap-around bond.**

Sometimes, you must start front-end cementing on some fairly lightweight fuselage structures, not on nice thick tubes. For example, you might have to begin with the channel that holds the windshield, or in a skylight well. **Make absolutely sure you get a good strong bond on these top cabin structures.** After all, the slipstream will be constantly trying to peel away these areas. And if the fabric peels here in flight, it can give you serious control problems by blanking out the elevators. *No fun at all!*

Many airplanes have mechanical attachments for the fabric in these areas. If so, replace them exactly as they were originally manufactured.

## Sometimes You Have to Sew

There are times when a cemented seam won't work. Our J-3 is a good example. After you cover the fuselage with overlapping seams over the longerons, you still have that big fin sticking up at the tail. It's easy to cover the fin with two separate pieces of fabric with cemented seams. But what about where the fin fabric joins the fuselage fabric? There's no structure under that seam, so you can't cement it. It has to be sewn and usually requires a hand-sewn seam.

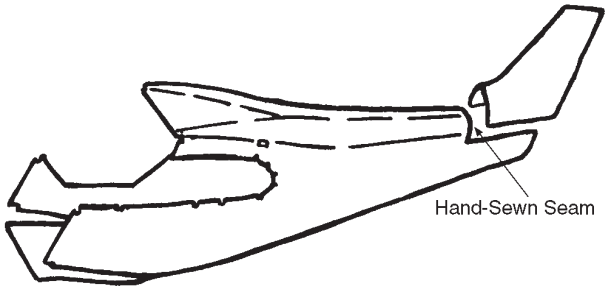


Sewing it is no big deal. Use a curved needle and doubled **Ceconite Hand Sewing Thread.** Pin

the fabric together first with T-head pins, then sew as shown below. Remove the pins as you close the seam by sewing.

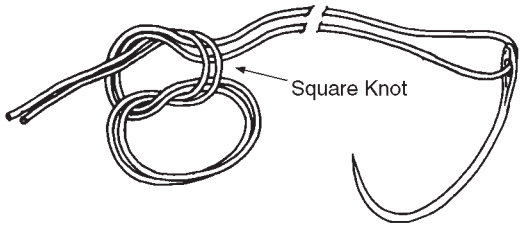


❒ First, tie the thread ends together in a square knot.

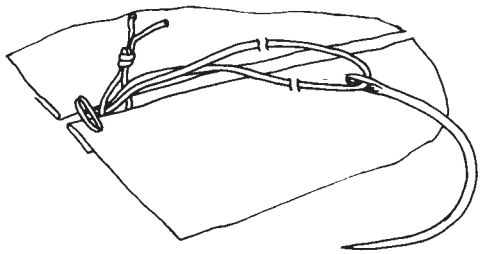

❒ Then make one stitch from bottom, to top, and back to bottom. Pass the needle through the tied loop.

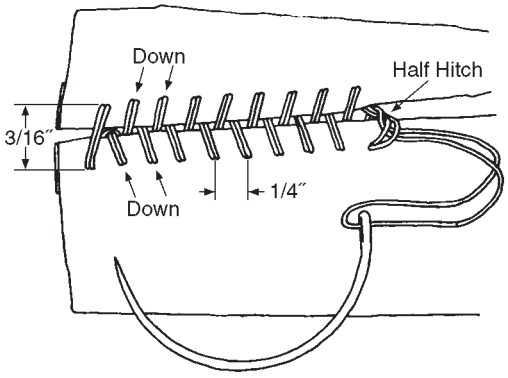


❒ Push the needle down through the lower piece of fabric, up through the space between the two pieces, and then down through the upper piece. This is called the "baseball stitch" for obvious reasons.

❒ Every ten stitches or less, work out the slack and secure the seam with a half-hitch. The end of the seam is tied off with two half-hitches in opposite directions, forming a square knot topped with a single half-hitch.

Sewn seams are reinforced with a minimum of 2″ tape, centered over the seam.

## Option Two: Buy a Fuselage Envelope, or Make Your Own

An envelope is just a big "slip cover" or "sock" that has one end open so you can slip it over the fuselage.

Many people make their own envelopes or partial envelopes for all aircraft components. If you have a sewing machine that can handle **Ceconite Machine Sewing Thread,** you can sew your own envelope. See the appendix on sewing and envelopes.

Most people, however, buy a commercially made envelope. These envelopes are available from a few **Ceconite** distributors. Fuselage envelopes are made from time proven patterns and usually fit pretty well. Most have that "extra inch" of fabric built in to allow for shrinking.

If an envelope doesn't fit, it's usually a problem with the fuselage, not the envelope. Over the years, a fuselage may be repaired many times after damage. If it's not welded or repaired in a jig, its dimensions and alignment can change significantly.

You start by turning the envelope **inside out** so the sewn seam is hidden. Then you slip it on and clamp it in place. The front is wrapped and cemented to front structure using the pre-coating method described in the blanket method.

The envelope may have a separate belly piece. If so, the the belly piece is installed first with 1˝ overlaps. This way, the edges of the envelope fabric are hidden underneath the fuselage.

Now that you have read about fuselage covering with both envelopes and blankets, the decision is yours. We find, however, that well-made commercial envelopes for fuselages are almost always time savers compared to piecing the fuselage together with the blanket method. They cost more than using blankets, but the result is clean and professional.

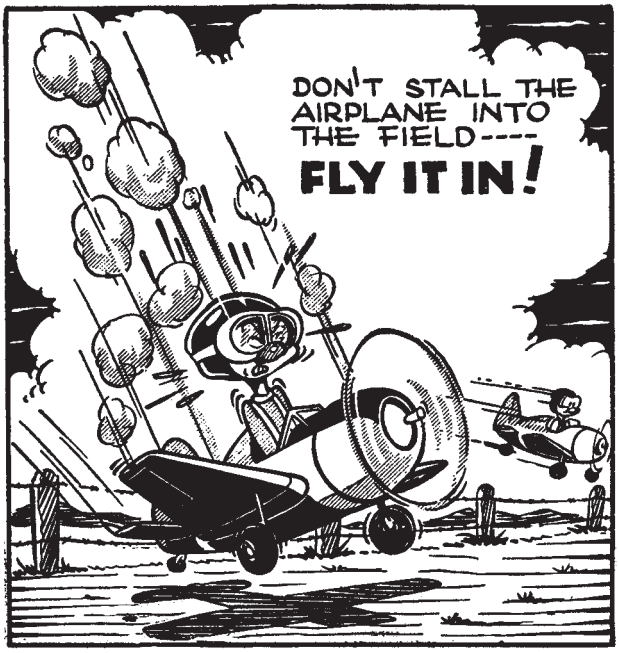


## Final Steps!

Now that your control surfaces and your fuselage are completely covered with fabric, there are some more steps to complete before it's time to crank up the spray gun.

- Heat tighten all the fabric, just as you did on the wing.
- Cut the fabric to accommodate any protrusions.
- Brush on the first coat of **Rand-O-Proof.**
- Apply any reinforcing tapes needed.
- Do any rib lacing necessary.
- Install inspection hole reinforcements and drain grommets.

# 7 – The Big Picture: How Many Coats?

### More Rules...

- Use *only* non-tautening dopes on **Ceconite.**
- Non-Tautening Nitrate Dope (**Rand-O-Proof**) is *always* applied first.
- Non-Tautening Butyrate Dope is applied over the nitrate.

## Coat 1

Nitrate **Rand-O-Proof, BRUSHED ON! THIS IS THE ONLY BRUSHED COAT!** This is the coat you brushed on right after heat shrinking. At this point in the manual you have already completed this step, so don't brush on another!

## Coat 2

First sprayed cross coat of **G-6302 Rand-O-Proof.**

## Coat 3

Second sprayed cross coat of **G-6302 Rand-O-Proof.**

## Coat 4

First sprayed cross coat of **W-8350 Non-Tautening Clear Butyrate** or **A-1690 Non-Tautening Clear Butyrate.**

## Coat 5

Second sprayed cross coat of **W-8350 Non-Tautening Clear Butyrate** or **A-1690 Non-Tautening Clear Butyrate.**

## Coat 6

Third sprayed cross coat of **W-8350 Non-Tautening Clear Butyrate** or **A-1690 Non-Tautening Clear Butyrate.**

Wet-sand this coat.

## Coat 7

First sprayed cross coat of silver **G-6303 Rand-O-Fill UV** protective dope.

## Coat 8

Second sprayed cross coat of silver **G-6303 Rand-O-Fill.**

Wet-sand this coat if necessary.

## Coat 9

Third sprayed cross coat of silver **G-6303 Rand-O-Fill.**

## Coat 10

Fourth sprayed cross coat of silver **G-6303 Rand-O-Fill.**

Wet-sand this coat.

## Coat 11 - Two Choices

First sprayed cross coat of **Colored Butyrate Dope** topcoat.

*...Or...*

First sprayed coat of **Ranthane** polyurethane topcoat.

## Coat 12 - Two Choices

Second sprayed cross coat of **Colored Butyrate Dope** topcoat.

*...Or...*

Second sprayed coat of **Ranthane** polyurethane topcoat.

## Coat 13 - Two Choices

Third sprayed cross coat of **Colored Butyrate Dope** topcoat.

*...Or...*

**NOTHING** if you used **Ranthane** polyurethane topcoat in Steps 11 and 12.

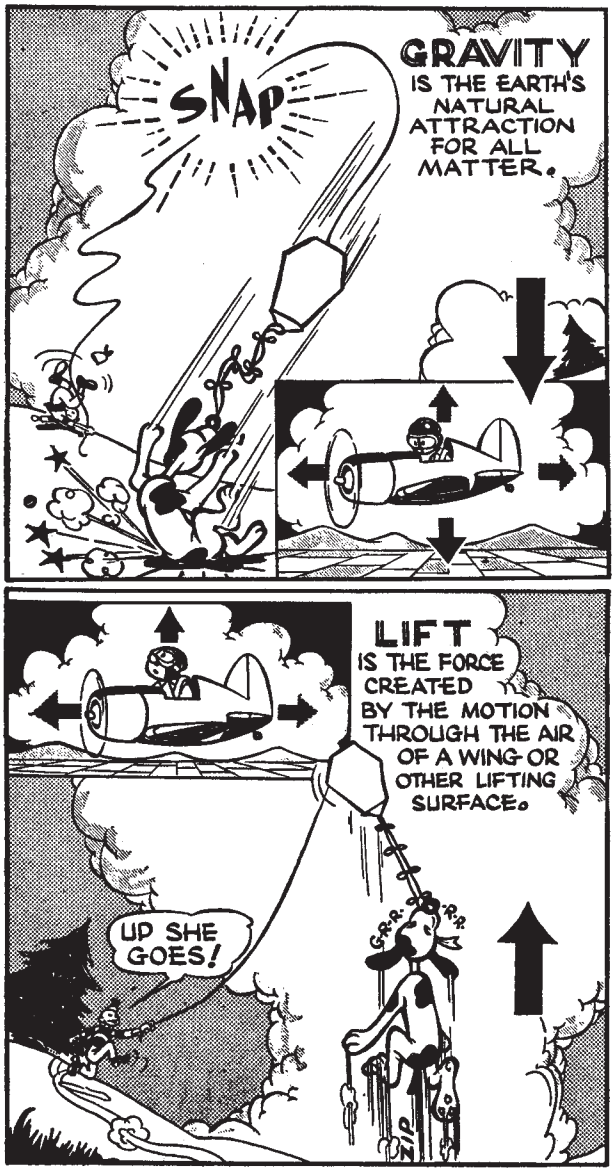


# Wow!

### What Does All This Stuff Weigh?

If you peel off all the **Ceconite 102** fabric, tapes and dried coatings from a J-3 cub done as above, the weight is 60 pounds. If you did the same thing in 1946 to the 4.0-ounce Grade A cotton and dope covering job as done at the Piper plant, the weight was 75 pounds.

*So relax!* Your low-solids **Ceconite** job with 12 or 13 coats of dope is 15 pounds lighter than an original 1946 Cub! Amazing, but true!

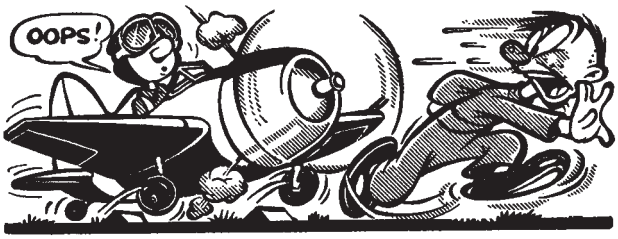

# 8 – Spraying Nitrate

The basics of spray painting are covered in Chapter 10 of this manual. If you are new to spraying and want some tips on equipment, proper temperature and weather conditions, or even how to build a cheap-o spray booth, you might want to look ahead to that area.

The EAA publishes a great basic book on spray painting which we highly recommend: *How to Paint Your Own Airplane* by Ron Alexander.

**DON'T SPRAY IN DIRECT SUNLIGHT! The sun will elevate the surface temperature and make the dope dry too fast.**

**DON'T SPRAY IN THE WIND! You'll pick up all the trash in the world. You can also over-cool the drying dope.**

**DON'T SPRAY BELOW 60 DEGREES! You might have to wait till spring for it to dry, and you stand every chance of the dope going stupid on you.**

**DON'T SPRAY ABOVE 95 DEGREES OR IN HIGH HUMIDITY! If you do you will need to add Universal Blush Retarder.**

## Blush

The enemy of dope is **blush.** Blush is simply water vapor in dope. Water in dope results in a milky appearance, sometimes streaky, sometimes uniform. Water in dope essentially ruins the film, and there is no way to remove it. If you ignore it and press on, in a few years the blushed coat will crack, delaminate and fail. The only way to fix a blushed coat is to let it dry, then wet-sand with 320-grit sandpaper until the milky appearance is gone. Lots of work.

Blush forms when the humidity is above about 80%. It can form in almost any temperature range, but is almost always a threat in high temperature/high humidity conditions. In simplest terms, it forms when the solvents evaporate from a sprayed dope film. Evaporation causes a drop in temperature just over the sprayed surface, enough on a humid day to condense the water in the air, which forms on the drying dope.

## OK... back to work.

**Y-9910 Universal Retarder** is a blush retarder that slows down the drying time of dope. Slower drying results in less temperature drop, which can prevent water condensation. **Universal Retarder** works in either nitrate or butyrate dope. If you suspect blush, here is how to use **Universal Retarder:**

1. Add one part **Y-9910 Retarder** to three parts thinner. (If you are spraying **Rand-O-Proof,** use **#286 Nitrate Thinner;** if you are spraying **Butyrate Dope,** use **9703 Butyrate Thinner.**)

2. Use this mixture to thin the dope one to one.

3. Spray a small test area, let it dry; and look for blush. No blush? *You win!*

**HOWEVER, IF YOUR TEST PROVES THAT BLUSH IS STILL FORMING, QUIT! WAIT FOR A LESS HUMID DAY.**

Dope is a different sort of coating from other paints you may have used. Here are some general information and basic rules of how to successfully use it.

## Low Solids, Multiple Coats

Dope is a very thin, low-solids coating. By low solids, we mean that when a coat dries, there is not really much dried film on the surface compared to latex house paint, enamels, or automotive polyurethanes. For that reason dope is applied in multiple coats. The good news is that these coats are really easy to spray, and the result is a flexible, durable coating that gives a long service life. After all, dope has been used with great success on aircraft fabric for almost 100 years.

## Each Coat "Melts In"

Unlike most other paints, every time you spray a coat of dope, it chemically melts into the layers underneath and softens every coat of nitrate and butyrate dope, right down to the bare fabric. For that reason, we recommend spraying only a few coats a day; otherwise you can create a jelly-like coating that can do funny things instead of drying properly. So plan your spraying schedule; it is better and more efficient to get many parts covered and prepped for spraying, then spray several parts in one session. This prevents the temptation to spray multiple coats on one part in a short time period.

## Two Coats a Day, Please

Old timers will tell you that they used to spray dope all day long. In fact, they recommend huge pressure pots so you can shoot ten to fifteen coats a day on a wing. We advise that this will cause nothing but heartache. Remember, each new coat melts in to the rest, and the whole kit and caboodle gets soft. If you happen to be spraying in conditions that are a bit too cool (60°F or lower) or in high humidity (above 80%), the whole thing can go crazy on you, resulting in crazing, alligator skinning, splitting the film, or pulling away from tapes, etc. So slow down! Two coats a day – one in the morning, one in the afternoon – are perfect. If you must rush, the minimum time between sprayed coats is two hours. You have to allow time for the solvents in each coat to evaporate and the coatings to get somewhat firm before you attack it with more coats of dope. We aren't saying you can't spray multiple coats when you are in a hurry, but we want you to understand that you can get yourself in trouble by doing so. Remember, the dope does not care when Oshkosh is, or that you didn't do a thing to your project during football season, and that you are now in a huge hurry to make some big airshow.

## Each Coat is Applied as a "Cross Coat"

Because dope is so low in solids, it needs to be sprayed as a **cross coat.** A cross coat is simply **two passes of the gun 90 degrees to each other.** Said simpler, one coat north and south, followed by another east and west. That makes one cross coat. The time between the two passes is not particularly important; if one dries before the other, no big deal. A dope cross coat is about equal to the thickness of one pass of other paints; so don't get hung up on weight or thickness.

## OK, Lets Spray!

**Remember, only non-tautening nitrate dope, like Rand-O-Proof, is used as the initial coats on slick modern fabric. Three coats of nitrate must be used for the initial coatings on Ceconite. The butyrate comes later.**

You used **Rand-O-Proof** as the initial brush coat to seal the fabric and to apply tapes, so you ought to be pretty familiar with how it works. Remember, **Rand-O-Proof** is a nitrate dope specially formulated for the initial coats on polyester **Ceconite** fabric. As you know, it is tinted light green so you can see where you have sprayed. The idea now is to spray two **cross coats** of **Rand-O-Proof** over the surfaces. These two coats provide an adequate buildup of nitrate to seal the tapes, inspection rings, grommets, etc. into a homogeneous sealed coating.

## 1. Thin

**Rand-O-Proof** is always thinned one to one with **#286 Nitrate Thinner.** It is *not* OK to substitute **Butyrate Thinner,** lacquer thinner, or anything else. If you want it to work correctly, use the right stuff.

## 2. Filter

Filter *everything* you spray. Use paint filters sized for lacquers or enamels. **Poly-Fiber** makes a 60 x 48 paint filter that works great with all **Randolph** dopes. You can get them from your aircraft supply house or **Poly-Fiber/Randolph** distributor.

## 3. Clean the Surface

Use a clean rag SLIGHTLY damp with **Randolph C-2210 Paint Surface Cleaner.** Lightly glide the rag over the surfaces to take away fingerprints, oils, and other contaminants. Do *not* soak the rag and slop wet puddles of **C-2210.** Too much **C-2210** does more harm than good. Keep it slightly damp. IMPORTANT: Follow with a perfectly clean virgin painting rag or a paper towel. You must follow with this clean rag to pick up the emulsified contaminants. If you just use the damp **C-2210** rag, you smear the contaminants around and leave them on the surface.

After using the **C-2210,** wait at least 30 minutes before spraying; longer is even better.

**Always ground controls being wiped with C-2210 Paint Cleaning Solvent with a grounding wire, especially in conditions of low humidity. Sparks from static electricity can ignite C-2210! If you are spraying on a day when you get doorknob sparks when walking across a carpet, it is mandatory that you ground the parts before using C-2210.**

## Fish Eye

Fish eye is the phenomena of a freshly sprayed coat of paint crawling away from a contaminate. Oils or contaminants on the surface almost always cause fish eye, and unfortunately you can rarely see them by eye on the fabric before spraying. The idea behind **C-2210** above is to remove the contamination before you spray. Contaminants can also be introduced through a spray rig, particularly one powered by compressed air. If you have a compressed air system, make sure you have water traps, and that the rig does not have a self-oiler in the system. Self-oilers work great for air tools, but not in spray rigs.

**Stay Away From "Fish Eye Eliminators!"**
These are simply silicone additives that are used in *automotive* or *industrial* paints. The theory is that if you add enough silicone, it reduces surface tension and the paint will flow over the contaminate instead of pulling away. Unfortunately, **silicone is the enemy of paint;** once you use silicone, not much will ever stick to the surface again. Don't use fish eye eliminators on any surface that might need repainting.

## OK... back to work.

## 4. Tack-Rag the Surface

A tack rag is simply a cloth impregnated with a sticky paraffin-like substance that picks up dust and dirt. Again, glide the tack rag over the surface with no pressure. This will pick up loose dirt and keep it out of your work. Whatever you do, don't scrub with the tack rag! This will grind the paraffin into the surface. Talk about contaminants!

## 5. Find the Glare

**Rand-O-Proof** is almost transparent; it's tough to see how much you are applying, even with its slight green tint. The best way to see how much you are spraying is to "find the glare" on the surface you are painting. Do this by walking around the part before you even pick up the spray gun. Notice how the light reflects on the part; this reflection is your best aid in spraying, particularly transparent products. If you plan your spraying so that you are always looking into the reflected glare of the lights in the sprayed film, you can easily see the film as it is formed. If you are not spraying enough, it will look dry; if you are spraying too much, you will see it puddling up and beginning to run. So plan your movements around the part; rehearse your spraying so you are constantly looking into the reflected glare. If you can't see glare, you don't have enough light and you are *guaranteed* to spray poorly.

OK, using all these tips, let's get to it. Your task is to spray at least two cross coats of **Rand-O-Proof** on the surface. Follow the guidance above and you should have no problems at all. When you are done, the surfaces will be transparent green with a rather uneven looking gloss. In other words, you have so little product on the surfaces, it is a long way from shiny, and may look a bit blotchy. Perfectly normal.

## Should I Sand Yet?

Nope, after only one brushed coat of **Rand-O-Proof** and two sprayed, there is not yet enough product to sand. You will get that opportunity soon enough.

# 9 – Spraying Clear & Silver Butyrate

At this stage of the game, we are through with nitrate dope, and we'll start spraying cellulose acetate butyrate dope. We change because butyrate dope weathers better than nitrate, is less flammable, and has a longer service life. Remember that we started with nitrate because **nitrate is the only dope that sticks to slick modern fabrics.** From now until we finish the spraying, only butyrate dope will be used. Although butyrate dope will not stick to fabric, it sticks very well indeed to nitrate dope.

All the basics we discussed in the last chapter still apply: correct spraying conditions, techniques, how to handle blush, etc.

## Now Spray Three Cross Coats of Clear Butyrate to Build Up the Film

Since dope is such a low-solids product, we now build and add body to the fabric coating package with three coats of clear butyrate dope.

At this stage we recommend using **W-8350 Non-Tautening Butyrate Dope** (tan). Don't get confused by the color tan; only a small amount of tint is added to the clear butyrate dope, and it dries perfectly clear. In fact, **W-8350** is always referred to as *clear butyrate,* since that is how it dries. Again, the slight tan tint helps you to see it when spraying.

**Use only non-tautening butyrate dope on Ceconite fabric. Do not use tautening dopes; these are only used on cotton or linen fabric and can shrink enough over time to damage underlying structure. EVERY PRODUCT USED ON CECONITE MUST BE NON-TAUTENING.**

Mix one part **9703 Butyrate Thinner** with one part **W-8350 Non-Tautening Butyrate Dope.**

Spray one full cross coat of clear non-tautening butyrate. After two or three hours, spray another full cross coat. Remember, two a day is about right. Be especially careful at this point not to get tempted into spraying more. **These first coats of butyrate over nitrate are critical.** Nitrate and butyrate dopes are slightly incompatible, so we put additives into them to make them work. Take great care not to flood the first coats of clear butyrate over the nitrate. Apply these coats slowly, carefully, and sparingly.

The next day, you can spray the third and final coat of **W-8350.** Let them dry thoroughly, at least overnight. The dope build-up should now begin to look glossy and perhaps plastic-like.

### Sanding Fabric

Fabric areas are always wet sanded.

Use 320- or 400-grit wet-or-dry sandpaper, and buy the good stuff. Wet sanding is gentler to fabric, and it allows you to control how much product you abrade off the surface. Water acts as a lubricant which makes the paper last longer and is much more efficient than dry sanding.

Before you start, get a bucket of water and lots of clean rags. Dip the sandpaper into the water often, and then wipe the sanding residue off the surface with the clean rag. Wiping often allows you to monitor how you are doing and keeps the area clean.

You really only sand **two areas** of a fabric-covered surface:

1. **The Curled-Up Edges of Pinked Tapes.** If you have edges that are rough, or you have pinks standing up, sand them smooth.

2. **The Open Bays of Fabric.** Sanding here removes runs, dirt, or imperfections in the dope film.

When you are through sanding, wash the area well with lots of clean water and wipe with clean rags. Don't let sanding residue collect and dry on the surface, or the next coats of dope will delaminate from the gritty surface.

So get the bucket and the sandpaper and make it *smooth!*

### OK... back to work.

**Do not sand over rib laces, rivet heads or protrusions under the fabric! This will cut the tape or the fabric in about two passes of the sandpaper. Any tape you cut will have to be replaced. TAKE YOUR TIME AND AVOID CUTTING THE FABRIC.**

## Silver Rand-O-Fill UV Protection

The next step is to spray four cross coats of **Silver Rand-O-Fill** non-tautening butyrate dope. **Silver Rand-O-Fill** has two major functions:

1. **Most importantly, to block the UV rays of the sun.**

2. **To provide a sandable fill coat for the topcoat that follows.**

**UV radiation is the most destructive force to today's fabrics. Ceconite does not rot, nor is it affected by fungus or mildew. However, polyester fabric directly exposed to the sun can lose 85% of its strength in a year. In other words, it will fall apart. The only effective way to protect from UV radiation is by spraying an aluminum coating that blocks all light, visible and invisible UV.**

### Mix Your Own?

**Rand-O-Fill** is a special non-tautening butyrate dope with aluminum flake added to it. Oldtimers used to add aluminum to clear butyrate dope to make their own UV protective dope. The problem is there's a very exact ratio of aluminum flake to dope that must be observed. If you add too little, you get insufficient UV protection. If you add too much, the silver dope becomes brittle, or even worse... dry. When the silver dope is mixed too dry, it delaminates in a few years of service.

Although we still sell aluminum paste for those who want to mix their own, we don't recommend it. Too risky.

So the bottom line is – you need aluminum dope to block the light and the invisible UV radiation. It takes about four cross coats of **Rand-O-Fill** to do the job. If you leave off one coat, it will be 25% less effective; two coats, 50%, etc.

Some say that you can save weight by omitting the silver coats or by skipping a few. Don't do it! It takes the full four to protect the fabric, and as you saw in **Chapter 7,** the weight is not really a factor.

*"How about chemical UV blockers added to paint. Other systems use them; why don't you?"*

Our lab tests... and years of service experience with polyester fabrics... prove that the only effective way to block UV is by having a sheet of aluminum between the fabric and the sun. We find that chemical UV blockers are only about one third as effective as silver coats. Why take the chance?

## Now Spray the First Two of Four Cross Coats of Silver Rand-O-Fill. Sand After the Second Cross Coat.

Mix one part **Rand-O-Fill** with one part **9703 Butyrate Thinner.**

Filter with a quality paint filter.

Now spray. Again, we recommend waiting **at least two or three hours** between cross coats, or a maximum of two coats a day.

## Oh No! Pinholes!

Pinholes are caused when solvents pop through a wet film like bubbles in an opened soda can. If the film dries before the bubbles pop, they get trapped in the film as tiny holes. They also appear when you spray silver over partially filled fabric weave, and you will often see these pinholes appear over tapes, particularly those that were applied a bit dry. Pinholes first crop up in the first two sprayed coats of silver dope. Silver has a way of showing all the defects in your fabric covering work; the truth comes out when the silver is applied.

Pinholes also appear in the fabric applied directly over hard surfaces like leading edge skins. Here, the solvents evaporate at half the rate as on open bays of fabric, since the escaping solvents can only escape out the top. So essentially the solvent bubbles hit the metal, then do a 180 to get out the top, which slows down the rate the solvents can evaporate. As you can understand, the more product you spray, the more solvents have to escape; and if you have a pinhole problem, it only gets worse the more solvent rich the coating is. So as a rule, if you get pinholes, stop spraying and let coats dry and the solvents escape before you pile on more. More won't fill the pinholes; it will only make things worse.

## So How Do You Fix Pinholes?

**1.** Let the silver dope dry at least overnight, then wet-sand the pinholes flat. Pinholes are like tiny volcanos – if you want to fill them, it is easier to sand down the miniature mountains first.

**2.** Use **Y-9910 Universal Retarder.** Mix one part **Y-9910 Retarder** to every four parts **9703 Butyrate Thinner.** Use one part of *this mixture* with one part **Rand-O-Fill.** This will slow down the drying time and hopefully give more time for the solvent bubbles to escape before they are trapped in the drying film.

**3.** If they continue, sand the surface flat, then brush some **W-8350 Clear Butyrate Dope** thinned one to one with **9703 Butyrate Thinner** over the holes and work the dope into the pinholes with your protected finger. Take care not to leave brush marks. The clear dope will seal the holes.

The bottom line is that you will probably get pinholes of some sort in the silver coats. As you add more dope and sand, the coating build up will get stronger and they will go away.

## Now Sand the First Two Cross Coats of Rand-O-Fill.

Again, wet-sand with plenty of water. Concentrate on the pinked edges of the tapes and the defects in the open fabric areas. Stay off rib laces and rivet heads. When you are through sanding, wash everything with lots of water, and wipe clean.

**Make sure you get all the sanding mud off the surface. If you let it dry, the next coats you spray on will eventually delaminate.**

## OK, Now Spray the Second Two Cross Coats of Rand-O-Fill.

Same as the first two, you will notice few pinholes at this stage.

## Spot-sand Any Obvious Defects, Otherwise Leave It Alone.

## How Do You Know If You Have Enough Silver on There?

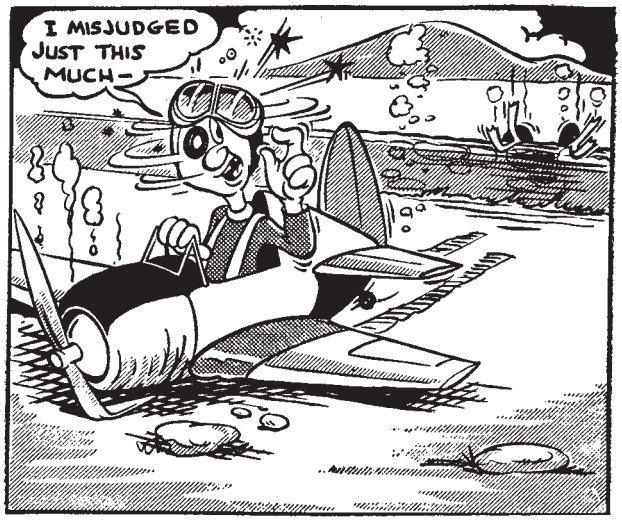


This is simple. Put a **60-watt** light bulb in a drop light. Cut out the center of one of your inspection holes underneath a wing. Kneel down so that you can look through the open hole up to the inside surface of the fabric. Have a buddy hold the drop light about a foot away from the upper surface of wing over the hole while you peer through the inspection hole to view the inside of the upper wing fabric. If you see no light, you have enough silver on the wing. If you see light, particularly if you see light where you sanded the edges of the pinked tapes, you need more **Rand-O-Fill** over those sanded areas.

## Whatever Silver You Sand Off, You Have to Spray Back On!

You will know you are done when no light passes through the fabric. Do this right, and your covering job will last 25 years or better outdoors.

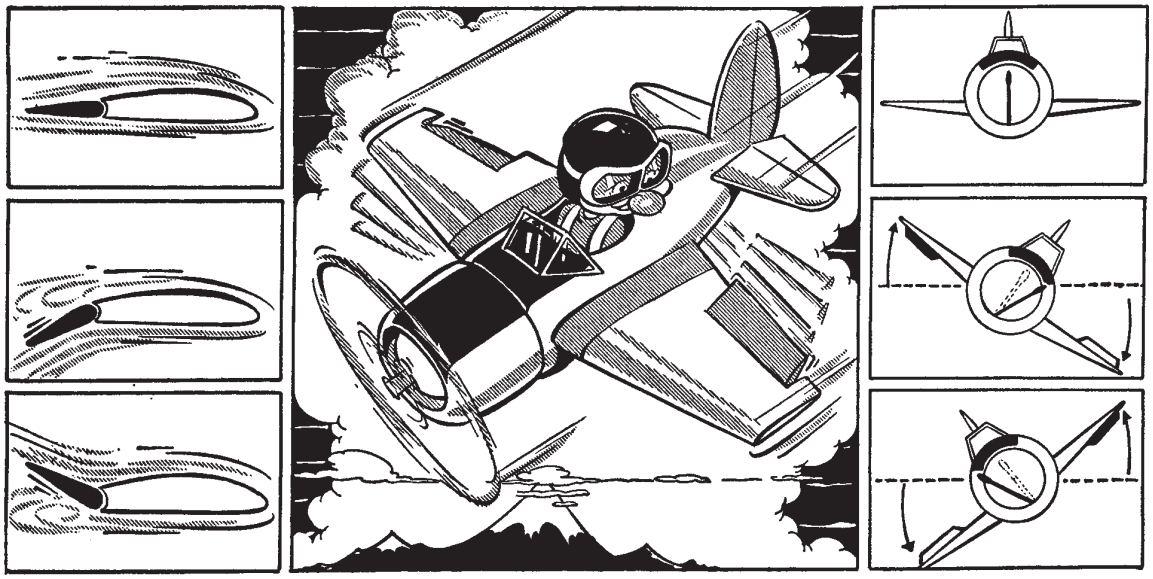

# 10 – Color Coats

**Premature failure of cover jobs is most often caused by brittle automotive paint cracking over subcoatings of flexible dope. When these brittle paints fail, they take subcoatings with them, which exposes the fabric to UV damage. TO COMPLY WITH THE STC, YOU MUST USE ONLY COLORED BUTYRATE DOPE OR RANTHANE OVER THE FABRIC COMPONENTS.**

### Your Painting Expectations

Before getting started, you need to take stock of your expectations for your paint job. Lately, airplane folks have been influenced by the quest for the perfect finish now rampant in auto sports. Everything on four wheels these days must be ultrashiny and perfect. Beats me why.

Recognize at the start that there's a fundamental difference between cars and fabric-covered airplanes. Cars have metal or composite structures that don't move or flex to the degree that fabric does. Your fabric-covered airplane will flex an infinite number of cycles in its 20- or 30-year service life. So will its paint.

Additionally, you probably plan to park it outside in Miami in the summer, fly it IFR to Anchorage in the winter, and operate it in rock riverbeds and wilderness strips.

Let's also factor in some historical perspective. The production airplanes of the '20s and '30s did not have wet-look, high-gloss finishes. Nor did military aircraft. When used normally, classic dope dried to a semi-gloss finish. That's the way fabric-covered airplanes looked in those years.

Sure, a few had dazzling finishes of 40 coats of sanded, rubbed-out color dope; one of the nice things about dope is that you can polish it if you choose. But those finishes lasted only a few years before they cracked and ringwormed; 40 coats of dope is absolutely beautiful, but is about 25 coats too many and is bound to crack in service. In the real aviation world, fabric-covered airplanes looked respectable in semi-gloss dope finishes with just enough dope to get the job done with long service life. Besides, in those years, they were built to fly, not to compete in paint finishing contests.

Start by asking yourself how you really plan to use your airplane. Will it sit inside in a carpeted, heated hangar surrounded by trophies? Will it fly as a working airplane? Do you anticipate repairs? Or do you want it to exclusively pose for photos?

You really have one basic choice when you select paint: normal gloss with easy repairability, or wet-look high-gloss with more challenging repairability. Keep this in mind as we go through the actual painting process.

**OK... back to work!**

## The Basics: Equipment, Cleanliness, and Mixing

Earlier in this manual we tried to convince you that you were probably the best person to paint your airplane.

We still maintain that the money you spend on contracting an "expert" to paint your airplane is better spent on good equipment to use yourself.

Your desire to do a good job and willingness to practice will deliver the paint job you want. But you can't be impatient; you have to teach yourself to paint only by spraying paint. This takes practice and experimentation, on boxes, old doors or paneling, not on your airplane.

## Equipment

Let's assume you have a good spray rig.

**If it runs off compressed air, it should have the following:**

✔ A storage tank big enough to give uninterrupted supply of air.

✔ Filters and water traps.

✔ A spray gun with a needle, nozzle, and air cap recommended for the type of paint you choose.

✔ At least 40 psi delivered at the gun.

✔ If you're using a pressure pot, NEW HOSES!

**If it's a turbine-powered HVLP, it should have the following:**

✔ At least two lengths of hose to cool down the turbine outlet temperature.

✔ The proper needle, nozzle, air cap combination for your paint.

**Airless sprayers and rented rigs are usually dirty and nothing but trouble. Get the right equipment and learn how to use it**.

## Cleanliness

**Clean your rig after every use.**

We mean field strip it and clean the gun every time. If you get lazy, you'll start spraying flecks of dried paint. You may think it's dust. It isn't.

Let's also assume that you took our advice and plan to practice spraying the paint you're going to use. Yes, that means you have to invest in some additional paint.

## Now the Question Is Where Are You Going to Paint?

We can tell you where **NOT TO PAINT:**

✘ Outside in fog or high humidity.

✘ Outside in direct sunlight.

✘ In the wind.

✘ In a dusty place.

✘ Around wet floors. (Ol' Cyrus wets his shop floor.)

✘ In a place with poor lighting.

✘ In a place where engines are regularly run.

✘ In a rented or borrowed spray booth where you can't take your time or leave parts until they are really dry.

✘ In an unprotected garage near your wife's car.

The answer is simple: **build your own "poor boy" spray booth.** It's easy to build, and you can add all the improvements you want.

Start by building a square frame out of wood or PVC pipe. This frame should be big enough to go all the way around a wing or fuselage with room to walk and maneuver the spray gun.

Hang the frame from your shop ceiling, or even better still, put it on pulleys so you can raise and lower it.

Cover the roof and sides with some cheap plastic sheeting, stapled or taped to the frame. Tape the sheets together with good old duct tape.

Rig up some shop lights or moveable light stands from scrap wood and sawhorses. Make sure you're not generating sparks, and shield the bulbs with chicken wire to prevent breaking.

If you *really* want to get fancy, add a big air conditioner filter at one end and an exhaust fan on the other, blowing **out** of the booth, to give filtered intake and an exhaust airflow. Make sure the fan has an enclosed motor with no chance of sparking. An explosion could ruin your whole day.

If you're unsure about the motor, leave out the fan and quit spraying when the booth is full of overspray. It will settle in minutes, and you can go back to work.

When you're through with all your painting, you can throw the whole spray booth away, or donate the frame and stuff to your EAA chapter.

### Mixing

Mixing paint is critical. The number one reason for "paint that doesn't match" is that it wasn't properly mixed before spraying.

If you don't get all the pigments into suspension before spraying, the paint won't be the color you want. **Paint settles, and must be shaken, period.**

Take it to the hardware store and put it on a double-action paint shaker for five minutes. **You can't shake it by hand.** That doesn't hack it. Use the paint within a week of shaking.

**Always filter paint before you spray it. No exceptions.**

## Gloss, Temperature, and Drying Time

**THESE RULES APPLY TO COLORED DOPE. RANTHANE DRIES CONSISTENTLY GLOSSY.**

**The slower dope dries, the glossier the finish will be.**

**The faster dope dries, the flatter the finish will be.**

The standard drying temperature for most one-part paints like dope is 77°. If you go up 10°, it dries in half the time. Up 20°, it dries in a fraction of the time.

If you go down 10°, it doubles the drying time; down 20°, it significantly lengthens the drying time; down 30°, and it may not dry till spring.

It follows that if you control the temperature, you can change the glossiness of your dope. Most of us don't have that luxury. It costs money to air condition or heat a shop.

But there are additives and reducers that control drying time chemically. Let's talk about them:

## Thinners, Retarders, Accelerators, and Rejuvenators

### Thinners

**Colored Butyrate Dope,** like all butyrate products is always thinned one to one with **9703 Butyrate Thinner.** 9703 is optimized for moderate temperatures.

### Retarders

A **RETARDER,** also called a blush retarder, is a very slow-drying solvent that is used as an additive to slow down drying. **Y-9910 Universal**

**Retarder** is a blush retarder that works in both nitrate and butyrate products.

"Blush" is a phenomenon that occurs in high humidity. As solvents evaporate from drying paint, the surface temperature of the paint is reduced significantly. If the air is humid, the water condenses on the drying paint causing a milky looking layer of water known as blush.

**Blush retarder slows down the drying.** That in turn keeps the paint from cooling as much, and stops blush.

As you can see, **blush retarder** is also helpful in slowing down drying time to improve paint gloss.

## Accelerators

An **ACCELERATOR** is an additive that speeds up drying time. We don't worry about this in nitrate and butyrate dope, because dope dries fast enough even in low temperatures.

But we do make accelerators for use with our epoxy primers and varnish. These products sometimes need help drying in cool conditions.

## Rejuvenators

A **REJUVENATOR** is a product that is used to soften aged, dried paint.

All paints have plasticizers added to enhance flexibility. They evaporate over time. When they do, aging paint can get brittle and crack.

**J-3000 Butysolv Rejuvenator** is simply a powerful solvent that has a new plasticizer mixed into it. When you spray rejuvenators over old dope, the solvent carries the plasticizer into the dope to restore suppleness.

Rejuvenators do not fill large cracks or restore faded color. But they do add years to finishes by restoring flexibility. New topcoat paint is usually applied over rejuvenated areas. **Colored Butyrate Dope** can be rejuvenated. Enamels and polyurethanes, including our **Ranthane**, cannot.

For specific instructions, check Appendix C: *Rejuvenating Fabric* at the back of this manual.

# Do Not Use These Paints Over Fabric!

## Enamels

Enamels work great over hard surfaces like primed aluminum or fiberglass, but they crack in short order over fabric. Enamels used to be popular over butyrate dope and cotton, so Ol' Cyrus may recommend them. But *don't do it*. Enamel over polyester fabric begins to crack within a year.

## Synthetic Enamel, Lacquer, or Epoxy Paint

All these crack over fabric and should never be used.

## Automotive Polyurethanes or Polyurethanes Made for Metal or Fiberglass

**Premature failure of cover jobs is most often caused by brittle automotive paint cracking over dope.**

**When these brittle paints fail, they take subcoatings with them, which exposes the fabric to UV damage. TO COMPLY WITH THE STC, YOU MUST USE ONLY COLORED BUTYRATE DOPE OR RANTHANE OVER FABRIC COMPONENTS.**

OK, these paints are wonderful for cars, boats, metal airplanes, RVs, etc. Imron, Ditzler, PPG, DuPont Centari, Alumigrip, Sterling, etc. are excellent paints. They come in beautiful colors

and have deep metallics, pearlescents, and other effects that are dazzling. We recommend them highly on anything ***except*** fabric-covered aircraft.

Twenty years of observation have shown that **all** these excellent paints will crack in 1 to 10 years on fabric-covered airplanes.

All automotive polyurethanes have additives to thicken them. These silica thickeners make them easy to apply, hard to sag and run, and give them a beautiful gloss. But these additives also make these urethanes brittle when their plasticizers evaporate. Plasticizers eventually evaporate from all paints, and the hotter and drier the climate, the faster they evaporate. Remember, you can't rejuvenate polyurethanes. Once they crack, that's it.

## What About Flex Agents?

Paint salesmen will tell you that their polyurethane will work fine over fabric if you add their flex agent. These flex agents showed up about the time Detroit started painting all their car bumpers. They're designed to allow the paint to flex when your teenager bumps a tree or another car. Hopefully, that won't be a lot of flex cycles, because they aren't designed for a lot.

How many flex cycles does your aircraft fabric go through every time you start the engine? Or when you fly for an hour? How many on a 180 SuperCub with a constant-speed prop?

Car paint salesmen have no idea what you're doing to your fabric hour after hour, year after year. Your fabric flexes an infinite number of cycles in its service life. Obviously, the paint must flex, too, or it will crack.

The sad story we hear most on our technical support line is, *"I bought an airplane painted with automotive urethane. It's 5 years old and it's cracking. How do I repair it?"* The answer is simple: ***you don't!*** You'll have to live with it until you're willing to re-cover.

In all fairness, we have seen some automotive urethane finishes that have survived over fabric without cracking. They're usually on aircraft that are based in cool, wet climates and are always hangared. But they seem to be the exception. Odds are that automotive urethanes will eventually crack. Wish it wasn't so, but it is. And remember, on a certified airplane, it is illegal with the Ceconite STC.

## Don't Use Clear Coats!

Clear coats work fine on automotive finishes. When used over aircraft paints, however, they can promote the growth of an ugly fungus or mold between the clear coat and the colored paint.

As you might expect, flexible aircraft paint like our **Colored Butyrate Dope** is full of plasticizers. These plasticizers are organic and make great food for fungi and molds.

Add some entrapped water vapor from spraying in humidity, put the big greenhouse of a clear coat over the top and, voila! A fungus festival!

Fungicides don't help. Your white airplane will turn brown, and you'll be unhappy. Fungus stains don't really happen with great frequency, but even a couple of instances are too much, particularly if it's your airplane.

### Don't use clear coats!

If you want more gloss, there are several ways to do that, explained further on in the section on **Colored Butyrate Dope.** Clear coats are *not* the way to do it.

Clear coats applied over urethane aircraft paint like our **Ranthane** are absolutely unnecessary.

**Ranthane** has a wet-look gloss that is not improved by clear coating. All that clear coating adds to **Ranthane** finishes is weight and expense.

## What Paints Do We Recommend?

We recommend using **Colored Butyrate Dope** or **Ranthane,** our wet-look, high-gloss paint. Before we get into a discussion, look at this general comparison:

| PARAMETER | Colored Dope | Ranthane |
|---|---|---|
| GLOSS | Semi gloss | Wet look |
| OVER FABRIC | Great | Great |
| OVER PRIMED METAL AND FIBERGLASS | Mixed results | Great |
| EASE OF APPLICATION | Piece of cake | More challenging |
| REPAIRABILITY | Simple | Requires more work |
| FLEXIBILITY | Great | Great |
| REJUVENATE? | Yes | No |
| CHEMICAL RESISTANCE | No | Yes |
| AVGAS RESISTANCE | Yes, but don't soak | Yes |
| TOXICITY | No problem; use a respirator | Mist is toxic to breathe; fresh air respirator mandatory |

## COLORED BUTYRATE DOPE

**Colored Dope** is made of the same butyrate resin as **Rand-O-Fill** and **W-8350 Clear Butyrate.** It follows then that **Colored Dope** bonds chemically to the dope coatings underneath to make one consistent coating. Over the years, this is a great advantage in resisting delamination.

This also makes for easy repairs when you use **Colored Dope.** You can easily soften and remove **Colored Butyrate** from the underlying dope. When you respray **Colored Dope** after a repair, it blends right in with no overspray halos or differences in luster.

### Before Spraying

Wipe with a cloth just barely damp with **C-2210 Paint Cleaning Solvent** to get rid of finger marks and surface impurities. This prevents fisheye. Follow with a tack rag to get that last-minute dust.

**Always ground controls being wiped with C-2210 Paint Cleaning Solvent with a grounding wire, especially in conditions of low humidity. Sparks from static electricity can ignite C-2210! If you are spraying on a day when you get doorknob sparks when you walk across carpet, it is mandatory that you ground the parts before using C-2210!**

### Thinner

Always thin one to one with **9703 Butyrate Thinner.** Don't use lacquer thinner, Acetone, Toluene or any other "substitutes." There are no other substitutes!.

### Shaking

Take the paint to your hardware store and shake it on a double-action paint shaker no more than one week before spraying. If you don't, the resulting color may not be the one you ordered.

## Filtering

Filter the thinned paint through a 60 by 48 mesh filter, or one suitable for lacquer. Don't use a finer filter; you'll strain out the pigment.

## Spraying

**Colored Butyrate Dope** sprays like **Rand-O-Fill.** It's dead easy.

**Start by spraying the edges of the wing or tail feathers.** If you spray paint on the edges first, the resulting overspray on the main surfaces will be covered by the subsequent coats applied on the main part of the surface. If you do the edges last, you'll blow overspray all over your beautiful surfaces.

**Spray cross coats as you did with earlier coatings.** Make sure you are putting on a nice, wet coat without flooding. Look into the glare of the lights to see how much paint you're putting on. Don't push it. If you really flood it, it'll run.

**Try to spray just enough to uniformly wet the surface without flooding.** Trend toward the cautious side. You can always spray more paint, but runs require sanding.

**If you get a run,** quit for the day on that surface and let it dry overnight. Next day, sand with 320- or 400-grit sandpaper, and spray it again.

Two coats may do; three at the most. If you have a smooth job that covers well, quit. Remember, the objective is to use the minimum coating to do the job, and no more. Lots of paint, even **Colored Butyrate Dope** will crack if it's piled on.

## Under Yellow & Red Colored Butyrate Dope

**Spray white butyrate dope, just enough to turn the dark silver dope white.** This may take two coats; the trick is to make the surface evenly white, not mottled. This old trick will give you better coverage and a much brighter red or yellow when you finish.

## Want Glossier Colored Butyrate Dope?

Remember the things you can control:

✔ Spray only when it's cooler.

✔ Add **Y-9910 Universal Retarder.** Mix one part retarder to three parts **9703 Butyrate Thinner.** Then use this mixture to reduce the **Colored Butyrate** one to one.

**Be careful.** If you add much more **Y-9910** than recommended, you'll drastically slow down the drying time. That will increase the chances of runs, as well as picking up airborne trash and dust.

It also can take so long to dry that the wet solvents can soak your tapes and glue joints. The result can be popped fabric seams or tapes that float off the surface! You'll *hate* that!

# Polishing Colored Butyrate Dope

**Colored Dope** can be rubbed out by hand with a rag and white automotive polishing compound. This works great, but takes a lot of elbow grease.

A far easier way is to use a quality variable-speed automotive buffer with a foam pad. Use *only* foam pads.

Go to an automotive paint store and buy liquid buffing compounds as used on automotive paint. Start with a medium compound, then follow with fine or anti-swirl. 3M and Meguiar's make a variety of fine products. AVOID "MIRACLE" POLISHES THAT CONTAIN SILICONE. For instance, never use Armor All; paint will never stick to the surface if you have to repair it later.

Be very careful when polishing over rib laces or rivet heads. Even with a foam pad, an aggressive

buffer at high speed can rub off the fabric on high spots. Use only a variable speed buffer, go slow, and be real careful until you get the hang of it.

## Waxing

Wax **Colored Dope** to increase the gloss after buffing and for protection. Use a quality automotive Carnauba-based paste wax. Again, avoid any miracle waxes with silicone.

## Taping for Trim

- ✔ Wait at least 12 hours for the **Colored Dope** to dry.
- ✔ Use the best grade paper masking tape available. Use Kraft paper, NOT newspaper, on large areas.
- ✔ Pull the tapes as soon as the trim paint dries to the touch. Don't allow the tapes to stay on for long periods or they could imprint the paint below.

## Painting the Metal Parts of a Fabric-covered Airplane

**Colored Butyrate Dope** has limited success and mixed results when you spray it over primed metal. We suggest that you use our **Randolph Mark II for Metal** or **Ranthane** over primed metal parts.

### MARK II FOR METAL

**Mark II** is a two-part catalyzed paint available in 50 colors to match **Randolph Colored Butyrate Dope.** Although **Mark II** uses a catalyst, the catalyst is not an isocyanate, which means you do not have to take special precautions to spray it. A regular charcoal mask works; no need to use a supplied air mask. **Mark II** is only slightly less solvent resistant than **Ranthane;** it weathers well, and is a tough, high-gloss paint that is superior in all ways to a one-part enamel.

**Mark II** is intended as a topcoat paint over metal or composite surfaces that have been primed with **W-2248 Epibond** or **B-6433 Rand-O-Plate** epoxy primer

Do not use **Mark II** over fabric or on structures that will be covered with fabric cemented with **New Super Seam** cement. **New Super Seam** may lift **Mark II.**

### Surface Preparation for Mark II

Metal or composite surfaces must be primed with **Epibond** or **Rand-O-Plate** epoxy primer. For best results let the primer dry for at least four days, seven is better, before spraying **Mark II.** Scuff-sand epoxy primer with an ultra-fine Scotch-Brite pad before applying **Mark II.** Lightly wipe the primer surface with a cloth slightly damp with **C-2210 Paint Surface Cleaner** to remove airborne contaminates or finger oil.

### Mixing and Thinning Mark II

**Mark II** may be sprayed with any equipment rated for lacquer or enamel. Mix the base paint one-to-one with **Mark II Mixing Liquid. Mixing Liquid** is both catalyst and thinner. Once you combine the **Mixing Liquid,** let it sit for 20 minutes before spraying.

Generally there is no need to thin **Mark II;** however, if a test spray results in orange peel, thin the mixed paint by adding one part **Mark II Thinner** to 5 parts mixed **Mark II** paint.

Spray three coats for good coverage, allowing at least one hour between coats.

## Taping and Trim

In normal conditions, wait at least two days for **Mark II** to fully harden before taping and applying trim colors. There's no problem waiting longer. To insure the base coat is hard enough to be taped, apply a test tape, let it sit for a few hours and remove it. If the base paint is not damaged and there are no tape tracks, you are definitely ready to tape and trim.

## Matching Gloss

**Mark II** is shinier than dope. If you paint the metal or fiberglass parts adjacent to the fabric with **Mark II**, the metal will be shinier than the dope on the fabric. This is how antique and classic airplanes looked when new; the metal was always shinier than the fabric. If you are doing an authentic restoration, we suggest you use **Mark II** over the metal and use dope over the fabric for the most original look.

If you decide to use **Mark II** on the metal and want to match the semi-gloss look of dope on fabric, you can use our **Randolph Flattener.** See the instructions on Flattener in the *Product Profiles* at the end of this manual.

## USING RANTHANE OVER FABRIC, METAL, AND FIBERGLASS

**Ranthane** is our wet-look high-gloss polyurethane. It covers fabric, metal and fiberglass equally well. If you want a high-gloss finish, you can use this on your whole darn airplane.

**Ranthane** is offered in the same colors as **Colored Butyrate Dope** and **Mark II for Metal.**

**Ranthane** is the most durable paint you can use on metal or fiberglass. Because it's a two-part crosslinked paint, it sticks forever to primed aluminum and fiberglass. It's also excellent for primed 4130 steel tubing before covering. It's chemically resistant, and it's practically bulletproof.

**IF YOUR EXPECTATION IS TO HAVE A HIGH-GLOSS WET LOOK AIRPLANE, THEN YOU SHOULD PAINT THE WHOLE THING WITH RANTHANE.**

Earlier, we cautioned against using brittle automotive polyurethanes over fabric. **What makes Ranthane different? It's simple; we leave out the filler materials that make other polyurethanes brittle.** We use only high-grade resins,

plasticizers, and pigments. **The primary design priority in Ranthane is long-term flexibility.**

For over 20 years, we've seen the wisdom of that design decision. **Ranthane** simply does not have the cracking problems of most polyurethanes when applied according to directions. Anybody willing to read the directions on the can or in this manual can do a beautiful job. Guys who already "know it all" are in trouble. In fact, we find that the guys who do best with **Ranthane** have never sprayed any polyurethanes.

**HERE ARE THE DIRECTIONS:**

**Apply Ranthane in two medium coats, enough to give a wet, even coat, but not enough to run. Each coat must be allowed to tack up before any more wet paint is sprayed on top. Each tacky coat holds the next wet coat.**

**NOTE: NO NEED TO SPRAY CROSS COATS. TWO NORMAL COATS ARE USUALLY SUFFICIENT.**

**Basically, that's it!**

## Lung Protection

**WARNING. You MUST wear a FRESH AIR SOURCE RESPIRATOR when spraying all polyurethanes, ours included. The respirator rated for organic solvents or lacquers you used in earlier stages of this job is NOT SUFFICIENT. The catalyst in polyurethanes contains polyisocyanides, as in CYANIDE! Read that POISON!**

Breathing the spray mist without protection can cause severe sickness or death. And the effects are cumulative. You may get away with it for awhile, but one day it will catch up with you.

# YOU MUST:

- **Wear gloves, long sleeves, and long pants.**
- **Use spray-proof goggles. Keep it off your skin and out of your eyes.**
- **Use a respirator that has a forced air source of clean air, free from spray mist. These are available from aircraft supply houses and are worth every penny.**

## Before You Spray

Scuff-sand primed metal or fiberglass with 400-grit sandpaper. **Rand-O-Fill** should be as smooth as possible. Wipe all surfaces with a cloth slightly damp with **C-2210 Paint Cleaning Solvent,** and follow with a clean rag. Wait at least 2 hours after using **C-2210** before spraying. Remove dust with a tack rag. Ground small parts to prevent static electricity.

## Wait!

Make sure the primer or **Rand-O-Fill** you'll be spraying over has had time to wick off all its solvents. This usually takes seven days in normal temperatures. If you push it, the solvents will be trapped under the **Ranthane** and will cause blisters.

## Spraying Yellow or Red

Spray just enough white **Colored Butyrate Dope** to turn the **Silver Butyrate** surface white. This will really help the color coverage of the **Ranthane** and give a rich, bright final color.

## Shake Well

Shake the paint on a double-action paint shaker for five minutes within a week before using.

## Straining

Strain the paint through a paint strainer suitable for polyurethanes before mixing it with catalyst.

## Adding Catalyst

**Ranthane** MIX RATIO: 2 parts **Ranthane** to one part **Ranthane Catalyst.**

A gallon of **Ranthane** requires two quarts of catalyst.

A quart of **Ranthane** requires one pint of catalyst.

No need to mix it all at one time, use a soup ladle for ease of measuring small amounts.

**Carefully inspect the catalyst before using. If the can is unusually swollen, don't open it. If the catalyst is milky or stringy, don't use it. Good catalyst should be thin and clear. Humid air ruins catalyst. Inspect it before each use. After using the catalyst, put the lid back on tightly.**

Mix the catalyst with the paint, and let it "cook" for 20 minutes before spraying.

Once you catalyze (add the catalyst), you have about 5 hours before the paint starts to cross-link and thicken. Be smart. Mix up only what you need.

If it starts to get stringy in the cup, you're all through with that batch.

You can keep catalyzed **Ranthane** in the freezer overnight to preserve it. Keep it away from the ice cream. Let it come up to room temperature before spraying. Don't force it back up with heat.

## Thinning and Spraying

1. Start by mixing 3 parts catalyzed **Ranthane** to 1 part **G-4200 Ranthane Thinner.**

2. Test spray something other than your airplane. Let it dry.

3. Before you proceed with the airplane, inspect the test to see if it had any sign of orange peel.

4. Hopefully not, but if you have orange peel, add additional **G-4200 Thinner** until the paint is smooth. You can go up to about 40% thinner. If you have to thin this much, be careful of runs when you are spraying on the vertical; don't flood it on.

**REMEMBER: YOU APPLY RANTHANE IN TWO NORMAL COATS; NO NEED FOR CROSS COATS.**

## Common Ranthane Errors

1. **Flooding on the first coat.** Car painters are notorious for this one. If you do this, it will all run off onto the floor and all over your shoes.

2. **Spraying wet paint into wet paint.** Another guaranteed way to get runs. This also keeps the paint from covering well. You must spray only into tacky paint! Here's the typical scenario: You're doing great. No runs so far, and you're finishing your first coat. You just finish a pass when you look back down the surface and see a spot you missed. So you give it a quick squirt, just a little to cover the spot. It runs! A wet coat sprayed into a wet coat that hasn't yet become tacky will simply wash away the underlying coat. Wet paint sprayed into wet paint has nothing to hang onto. It could take 50 gallons to paint a Cub this way.

Your complaint over our Tech Support Line will be that **Ranthane** does not cover, or that we forgot to add something. We will refer you to this paragraph when you call.

## Fixing Problems

- ✔ **RUNS:** Quit what you're doing and let the whole thing dry for about four days at the minimum. A week is better. You have to let the paint fully crosslink before you spray more over the top of it or it could wrinkle. When a week is up, sand out the runs and respray.

- ✔ **ORANGE PEEL:** Turn down the air pressure on your gun. Increase the **G-4200 Thinner** in the catalyzed paint.

- ✔ **GRIT IN THE PAINT:** First check for gun cleanliness. If you're sure it's not coming from the gun, try filtering the paint twice.

## The Respray Time Window

It takes a full week at 77° for **Ranthane** to fully crosslink. While it may appear to be fully dry, it's still cooking and is actually pretty fragile.

If you plan to spray in stages, you must wait at least four days, preferably the full week if you can, to allow full crosslinking. In other words, if you only partially finish a surface and you must quit for the day, the safest thing is to wait a week to apply the next coats. Lightly scuff-sand with 400 paper before respraying.

**If you don't wait, underlying coats may wrinkle.**

## Taping for Trim

Buy the best tape available. Fine-line polypropylene tape is available from the auto paint store. Paper tape is OK, but get the best you can find. And use Kraft paper, not newspaper.

Wait at least 12 hours before taping for trim on **Ranthane**; more is always better; don't rush it. For best results, do a tape test. Put a piece of tape on some part of the airplane that won't show. Leave it on for a reasonable period of time that will replicate the time you think your tape and masking paper will be on the airplane during the real taping. Pull the test tape and inspect for tape tracks or other damage to the **Ranthane**. If there is no problem, proceed; if there is, wait.

After spraying your trim, pull the tapes off as soon as the **Ranthane** dries tack free. Usually an hour or so will do it.

If the base coat of **Ranthane** has been on for a week or more before you put on your trim, scuff sand the base coat to give tooth adhesion for the trim paint. Be careful not to fuzz up the trim tape or the paint will bleed under it.

## Matching Gloss

Like **Mark II**, wet-look **Ranthane** is shinier than dope. If you paint the metal or fiberglass parts adjacent to the fabric with **Ranthane**, the **Ranthane** on the metal will be shinier than the dope on the fabric. Remember that this is how antique and classic airplanes looked when new; the metal was always shinier than the fabric. If you are doing an authentic restoration, we suggest you use **Ranthane** over the metal and use dope over the fabric for the most original look.

If you decide to use **Ranthane** on the metal and want to match the semi-gloss look of dope on fabric, you can use our **Randolph Flattener.** See the instructions on Flattener in the *Product Profiles* at the end of this manual.

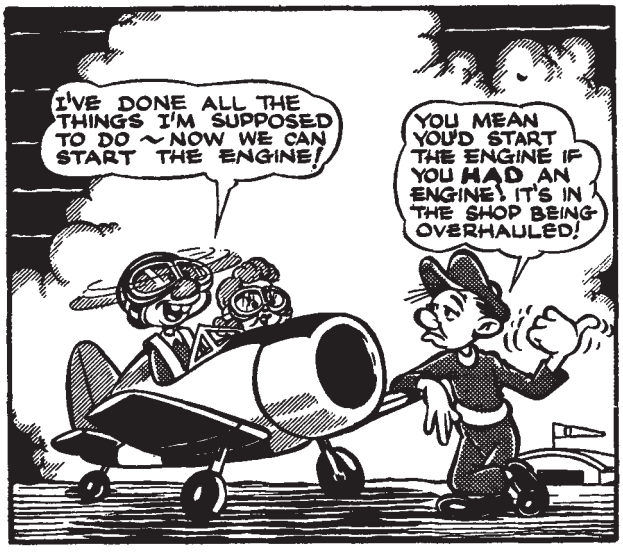

# Appendix A: Envelopes & Sewing

## Envelopes

Think of an envelope as a huge sock, or a slip-cover to simplify the covering of a fuselage, a wing, and tail feathers. Envelopes are sewn on three sides, with an open seam to allow you to pull it on.

After envelopes are slipped on, they are cemented closed at the open seam. Heat shrinking and doping then holds the envelope firmly in place. It is not necessary to cement around the entire perimeter of the frame as done with the blanket method.

Envelopes are sold by a few aircraft supply houses. Quality envelopes come from proven patterns, most fifty or more years old. If they don't fit, it's usually the fault of a bent or modified airframe rather than the envelope.

## To Install an Envelope:

- ❒ Turn the envelope inside-out so the sewn fringe is on the inside.
- ❒ Pull the envelope over the part. There should be about an extra inch of fabric at the perimeter.
- ❒ Straighten the fringe on the inside of the envelope. If you let the fringe bunch up or snake back and forth, you will see it forever.
- ❒ Clamp the envelope in place with spring clamps or clothespins.
- ❒ Cement one side of the open seam to the aircraft structure with **New Super Seam.** Cement the other to make a closure with at least a one-inch overlap.
- ❒ Take the clamps off one side at a time, and heat shrink at 250°, **STARTING OVER THE SEAM.** If you shrink from the seam out, the seam stays straight. On the other hand, if you go first to the center of the part to shrink, it will pull the seam toward the iron and leave snaking, off-centered seams.
- ❒ Shrink the whole envelope from the seams out at 250°.
- ❒ Brush on **Rand-O-Proof,** and follow the normal Randolph doping sequence. You must put a finishing tape over every sewn seam in the envelope.

## Envelope Pros and Cons

**PROS:**

- ❖ Huge time savers on fuselages. Fuselage envelopes usually are pulled on from the tail. The separate belly piece is cemented into place first, wrapping around the lower longerons. Then the sides are wrapped around the longerons with 1˝ overlaps, and the edges end up hidden on the fuselage bottom.
- ❖ Envelopes take the fitting and planning time out of fabric installations.

**CONS:**

- ❖ Lots of fiddling with inside fringes.

❖ Wing envelopes usually have chordwise sewn seams. These seams do not fall over ribs. This gives extra seams to worry about shrinking straight and taping. Some manufacturers offer spanwise seams.

## Sewing

There is little need for sewing when covering with **Ceconite.** The only time a sewn seam is required is when fabric must be joined over an open area with no adequate sub-structure underneath. This rarely happens.

The illustration below shows the one instance in Cub and Aeronca type fuselage where sewing is required. Here there is no substructure where the fuselage fabric joins the fin fabric. Thus, a sewn seam is required.

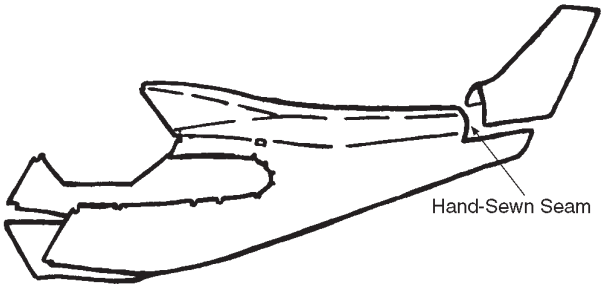


**There are two kinds of sewn seams approved with our STC: hand sewn and machine sewn.**

## Hand-Sewn Seams

The instance above is a good candidate for a hand-sewn seam.

❒ Start by folding the edges of the fabric on both sides of the seam at least ⅜″ to the inside of the seam.

Use an iron at 225° to crease this ⅜″ fold. This folded part will give two layers of fabric at the edge for extra strength.

❒ Temporarily join the seam with T-head pins. As you sew, you pull out the pins just ahead of your stitching.

Use only 15 lb **Ceconite Hand Sewing Thread**, doubled. A 3″ or 4″ curved needle works great.

❒ Sew with a baseball stitch with a maximum of ¼″ spacing. The sewing holes must be a minimum of 3⁄16″ from the edge of the seam.

See the illustrations below:

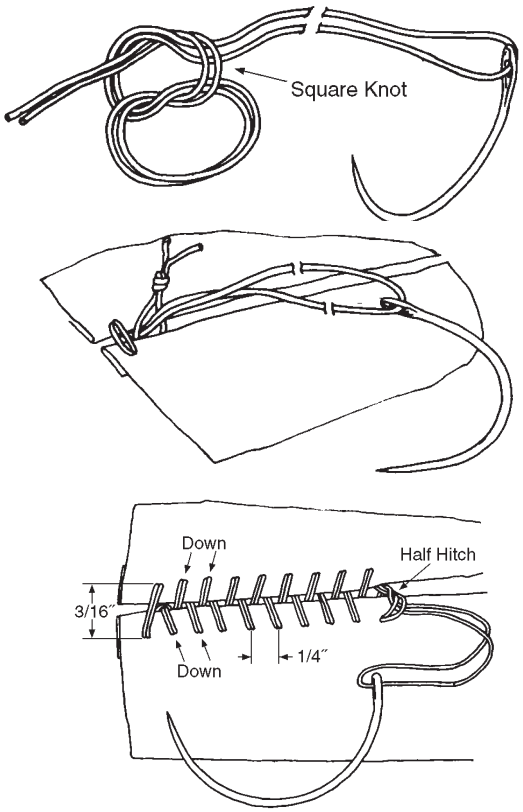


❒ When the sewing is over, heat shrink normally, and put a 2″ finishing tape over the seam.

## Machine-Sewn Seams

Most of us will never need to machine sew anything. If you have a sturdy sewing machine and you have the skill and interest to sew your own seams, read on.

Always use only **Ceconite 10 lb Machine Thread**. Do not use cotton thread or upholstery thread. They will rot in short order.

**The following seams are approved for sewing aircraft fabric:**

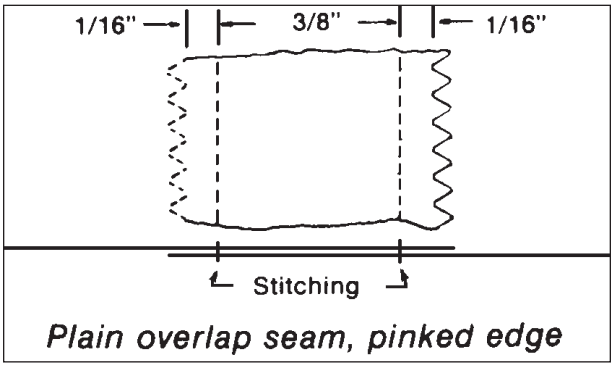


*Plain overlap seam, pinked edge*

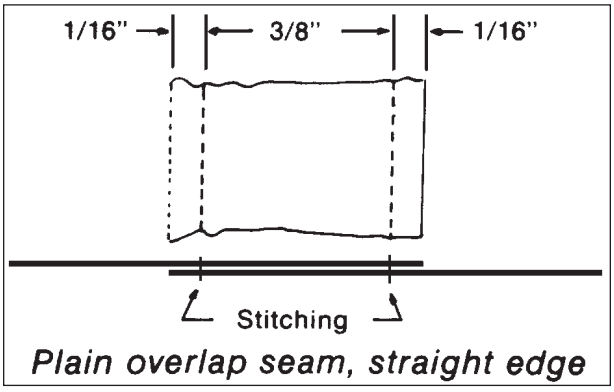


*Plain overlap seam, straight edge*

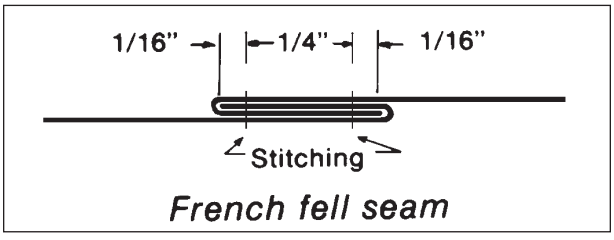


*French fell seam*

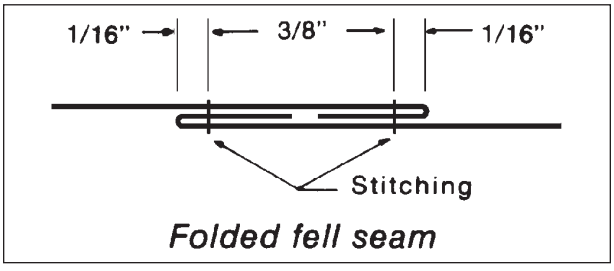


*Folded fell seam*

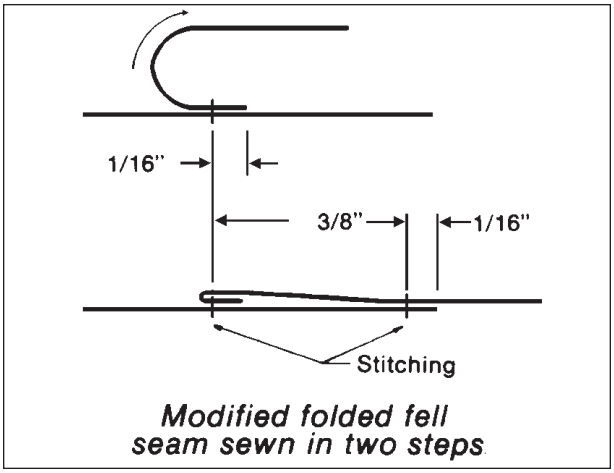


*Modified folded fell seam sewn in two steps*

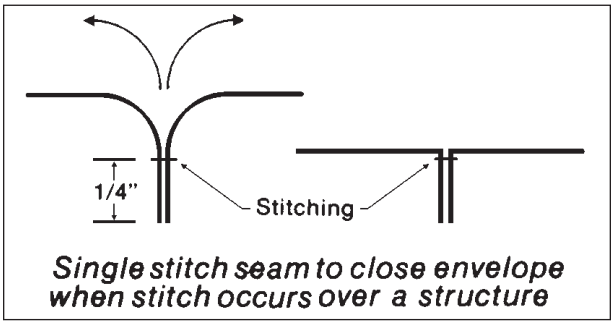


*Single stitch seam to close envelope when stitch occurs over a structure*

All sewn seams must be covered with at least a 2-inch finishing tape.

## Make Your Own Envelope!

There's one time you may be interested in sewing. If you wish, you can sew your own simple fuselage envelope. Here's how:

❒ Unroll a single piece of fabric long enough to stretch from the rear of the fin to the forward cabin area.

❒ Clamp this fabric to the fin and continue clamping down the fuselage to the front of the cabin. Clamp around a forward fuselage tube by the boot cowl where you would normally cement the fabric to the frame at the front of the fuselage.

❒ If this is going to work for you, this one piece of fabric should be wide enough to cover the

distance from the top of the fin to the lower fuselage longerons, as well as the whole cabin area from top to bottom. In other words, you should be able to cover the whole side including the fin with one 70-inch-wide piece of fabric.

❒ Unclamp the top part of the fabric and lay it over the centerline of the turtleback. Most airplanes have a flimsy wooden stringer here as the top "spine." Remember, you can't make a cemented seam over a stringer; it must be a longeron. That's what all this sewing is about.

❒ Trace this spine with a soft lead pencil. This will be the pattern for a single seam we will sew to join our envelope at the top.

❒ Unclamp the fabric and lay it on the floor. Put a duplicate piece of fabric the same length directly over it. Pin the two pieces together with T-Head pins.

❒ Sew the two pieces together at the pencil line using one of the seams illustrated above. Or take it to a commercial seamstress. Make sure you bring the **Ceconite Machine Sewing Thread.**

❒ Cut out the excess fabric on the top side of the spine seam. Turn the envelope inside out and drape it over the fuselage. Hopefully, it lies smoothly over the fin and has a straight seam all the way up the turtleback over the spine. It should be long enough to drape over the fuselage sides below the lower longerons.

❒ Make a belly piece and cement it to the lower longerons with 1″ overlaps.

❒ Cement the side pieces to the belly with 1″ overlaps. Finally, cut out the window areas and cement as appropriate to the cabin areas.

There are other instances where you may choose to sew. As long as you use one of the approved seams and use **Ceconite Machine Sewing Thread**, you can make whatever your sewing skills allow.

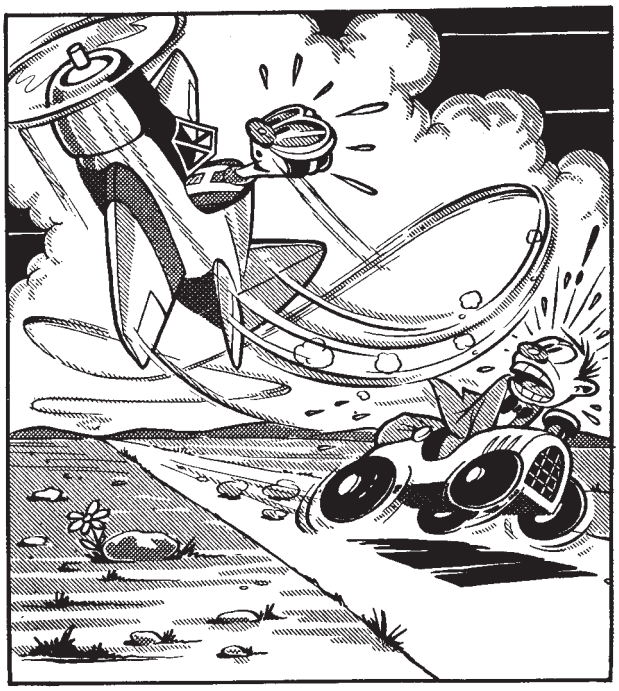

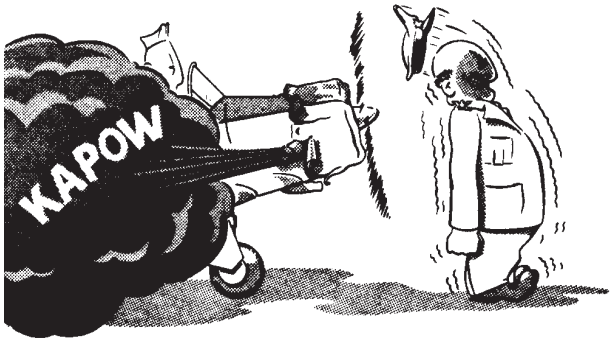


Avoid making abrupt mixture changes, especially on the ground.

# Appendix B: Covering Plywood Surfaces

Fabric covering over sheet plywood has been a popular way of adding strength and hiding wood grain since the '20s. Bellancas and Mooneys are known for their fabric-over-wood construction.

Any Ceconite fabric can be used to cover plywood. Our **Uncertified Light** fabric is the most popular choice for its smooth finish and workability. Don't let the name **Uncertified Light** fool you, you may use this fabric to cover wood on certified aircraft.

## Prepare the Surface

❒ Fill low spots and imperfections in the wood with Poly-Fiber **SuperFil.** Sand smooth. You can find Poly Fiber **SuperFil** from a Randolph/Ceconite/Poly-Fiber distributor or from any of the major supply houses.

## Varnish

❒ Varnish over the wood and **SuperFil** with **EV-400 Epoxy Varnish.**

Combine one part **EV-410 Catalyst** with two parts **EV-400 Epoxy Varnish.** Let this soup "cook" for 30 minutes. Filter through a paint filter. Thin two parts varnish to one part **E-500 Epoxy Thinner.**

❒ Brush or spray two coats of varnish. Allow the first coat to dry to the touch before spraying the second. If you let more than 4 days go by between coats, lightly scuff-sand the first coat.

For best results, let the varnish dry for a full 7-day crosslinking cycle before you try to put any **Rand-O-Proof** or **New Super Seam** over it. If you try it earlier, the varnish may wrinkle or lift.

## Pre-Coat With Rand-O-Proof

❒ Brush one coat of **Rand-O-Proof** thinned one to one with **286 Nitrate Thinner.** Allow to dry. Spray on two more coats, thinned one to one. These pre-coats will help fabric adhesion and prevent pinholes.

## Apply Fabric

❒ Cement the fabric exactly as described in the main section of this manual. There is no difference to cementing fabric over wood; all overlaps and heat forming techniques remain the same.

## Heat Shrink

❒ **Start with the iron at 225°, NO HOTTER!** The idea is to only take the wrinkles out of the fabric. If you go to higher temperatures, you could pull the fabric out of the natural wood depressions. This bridging could give unwanted air pockets under the fabric.

If 225° leaves some wrinkles, selectively go up to 250°. Be careful not to cause bridging.

## Rand-O-Proof

❒ Thin **Rand-O-Proof** one to one with **286 Thinner**. Brush it over the fabric. The thinned **Rand-O-Proof** will soak through and reactivate the precoated **Rand-O-Proof** below.

If any bridging is apparent, wait about 30 seconds for the **Rand-O-Proof** to get tacky then brush over the depression again. The tacky **Rand-O-Proof** should stick the fabric down into the depression.

If the worst occurs and the fabric will not stay in a deep depression, slit the fabric carefully with a razor to cut the bridge. Patch later with a piece of fabric or tape and **Rand-O-Proof.** Careful filling and preparation should avoid this from ever happening.

## Tape and Spray Clear and Silver Dope

❒ Continue the process as written in the main part of this manual.

# Notes

# Appendix C: Rejuvenating Fabric

One of the nice things about painting your airplane in **Colored Butyrate Dope** is that you can rejuvenate it.

To refresh your memory, rejuvenation is the process of adding fresh plasticizers to aging, brittle coatings.

All coatings lose their plasticizers in four or five years. The rate at which plasticizers leave is dependent on temperature and humidity. Airplanes outside in Phoenix can show signs of brittleness in seven years. Those in Maine may last indefinitely.

There is no hard and fast rule about when to rejuvenate. Generally, hangared airplanes may be ready in 15 years. Those kept outside in 7 to 10. It really depends on the heat and humidity, like all evaporation. If the dope seems brittle and small cracks start developing, it is probably time.

## What Rejuvenation Does

1. Adds fresh plasticizer. This makes the coatings flexible and supple.

2. Softens and slightly flows the old coatings to allow hairline cracks to close and fill.

## What Rejuvenation Doesn't Do

1. Restore color and gloss to faded paint.

2. Fill big cracks in the coatings.

## The Steps

❒ Disassemble the aircraft, if possible. It's much easier to spray on sawhorses than upside down under wings.

❒ Wash the fabric thoroughly as you would your car to remove dirt, grease, grime.

❒ Wet-sand the surface with 280-grit sandpaper. Flush all residue and dry with clean rags.

❒ Mix two parts **J-3000 Butysolv Rejuvenator** to three parts **9703 Butyrate Thinner.**

❒ Spray one full wet cross coat (two passes of the gun at right angles).

❒ Wait 30 minutes until the coatings become soft, then you may be able to use your fingers to smooth out hairline cracks and small ringworms. Protect your hands.

❒ Wait two hours and spray on another cross coat of thinned rejuvenator.

❒ Let dry at least overnight.

❒ Fill any remaining small cracks with **Rand-O-Fill** using an artist's brush. If desired, spray two coats of **Rand-O-Fill** to give a good filling and sanding base. Sand as required.

❒ Spray **Colored Butyrate Dope.**

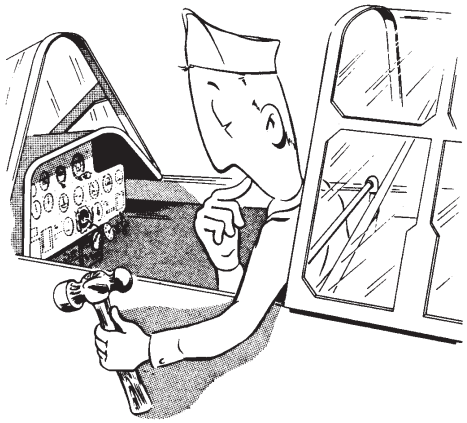

# Notes

# Appendix D: Dealing With Stains

There are two kinds of stains that need attention on any kind of paint: **gasoline stains and bird droppings.**

**Colored Butyrate Dope** is much more susceptible to staining than **Ranthane.**

We all know that aviation fuel has dyes for identification. If you get lazy and let fuel pool for days in fuel cap recesses, or keep putting off fixing that leaking quick drain, you can get staining.

The best prevention is to wipe fuel off when you see it, because if you let it accumulate, you can have problems.

The same for bird dooky. If you let the droppings sit for a few weeks on paint, you can get permanent staining. Particularly in berry season. They love them berries.

## To Remove Stains

❒ First, try good old Clorox laundry bleach. Work it in with a sponge, and then flush with lots of water.

**If that doesn't fix it, try this:**

❒ Dissolve 1 level teaspoon of swimming pool granulated chlorine in 2 liquid oz of water. Let it sit 10 minutes.

❒ Add 2 liquid oz of MEK and 2 liquid oz of **Y-9910 Universal Retarder.**

❒ Soak the stained area for 3 to 5 minutes with a sponge or a brush.

**CAUTION: This mixture develops chlorine gas. Do not store in a sealed container. Discard after use. Keep out of eyes and skin. Pot life is two hours.**

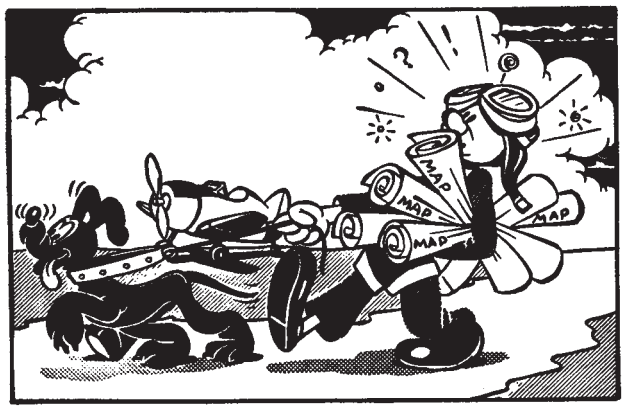

Make sure your electrical system is on the top line before setting out on a flight.

# Notes

# Appendix E: Making Repairs

**NOTE THAT CECONITE REPAIR PROCEDURES HAVE CHANGED WITH THIS REVISION TO THE CECONITE MANUAL. TO USE THESE PROCEDURES HOWEVER, YOU MUST USE ONLY NEW SUPER SEAM FABRIC CEMENT WHICH IS MUCH MORE CAPABLE THAN CEMENTS APPROVED IN EARLIER CECONITE MANUALS.**

All **Ceconite** repairs are done by cementing a patch over the damaged area with **New Super Seam** cement.

There is no requirement in the **Ceconite STC** to do any sewing.

## The Rules Are Simple

❖ A hole 8 inches or less requires an overlap of at least 1 inch of patch material over 1 inch of old fabric. Finishing tapes are not required over the cemented seams unless the patch is on the top of a wing.

❖ A hole 8 inches or more requires an overlap of at least 2 inches of patch material over 2 inches of old fabric. Repairs 8 inches or more require at least a 2-inch finishing tape over the seams. These tapes should be centered over the seams of the patch.

## Repairing Colored Butyrate Dope

❒ Trim the ragged parts out of the hole.

❒ Lay unshrunk patch material over the hole and trace the outline of the patch with a soft lead pencil. Make sure you have the required overlap. Square or rectangular patches look better. Cut out the patch with pinking shears.

❒ Mask off the area outside the patch. Leave an extra half inch or so of working room larger than the patch.

❒ Clean off all the coatings inside the masked area by soaking the coatings with **9703 Butyrate Thinner.** The coatings will then become soft allowing you to easily scrape them off with a small putty knife. Clean the coating right down to the bare fabric.

**WARNING: NEVER USE PAINT STRIPPER TO REMOVE PAINT AND COATINGS FROM CECONITE. PAINT STRIPPER WILL RELEASE CEMENTED SEAMS, LIFT TAPES,AND MAY LEAVE A PARAFFIN COATING THAT MAY MAKE REPAINTING IMPOSSIBLE.**

❒ Cement the patch to the old fabric with **New Super Seam.** Let it dry.

❒ With a **225° iron,** heat-smooth the cemented areas.

❒ With a **250° iron,** heat-shrink the area of the patch over the hole. This acts as a shrinking panel to re-tighten the fabric in the area of the repair.

❒ Brush on a coat of **Rand-O-Proof** and let it dry. Apply finishing tapes, if required, with **Rand-O-Proof.** Heat-smooth.

❒ Spray **Rand-O-Fill** to fill.

❒ Paint with **Colored Butyrate Dope.** You will

find that **Colored Butyrate Dope** is easy to spot spray into the old paint with a good match unless the old paint is faded.

## Major Repairs

Let's say you dinged a whole wing tip. After you replace the ribs and are through crying, you can make a fairly simple job of a big fabric repair job.

❒ Start at the last good rib before the damage, and take off the old finishing tapes with **9703 Butyrate Thinner.** Cut the rib laces. Clean off at least two inches of fabric over the good rib with **9703 Butyrate Thinner;** scrape off the old coatings right down to the bare fabric.

❒ Cement in a whole new piece of fabric to cover the wing tip with a two-inch overlap over the rib area. Heat shrink. Apply **Rand-O-Proof,** rib lace, and tape. Put on **Rand-O-Fill** and **Colored Butyrate Dope,** and go fly. If you do it neatly, no one will ever know.

## Repairing Ranthane

The big difference between repairing **Ranthane** and **Colored Butyrate Dope** is that you can't clean off **Ranthane** with **9703 Butyrate Thinner** (or anything else). Unless you can reach the back of the damaged fabric from inside, then you'll have to sand off the **Ranthane** coats.

**If you CAN get to the back of the damaged fabric, here's how to do a next-to-invisible repair.**

❒ First, mask around the damaged area on the outside. If you have, say, a 3˝ hole to fix, mask an area that leaves an inch all around the 3˝ hole. Apply the masking tape right to the **Ranthane.**

❒ Run a scribe around the edge of the masked area. You want to cut through the layers of finish, but NOT through the fabric.

❒ Use **9703 Butyrate Thinner** to soften the underlying dope from the back side. When it becomes soft, pry up an edge of the damaged **Ranthane** on the outside and peel it away from the masked area.

❒ Carefully cut a patch to fix exactly within the masked area. Cement it into place.

❒ Follow the standard repair sequence from this point on.

**If you CAN'T get to the inside…**

❒ Mask off the area of the patch and sand off the **Ranthane** coats with dry 280-grit sandpaper.

❒ When you get down to the silver **Rand-O-Fill** below, get out the **9703 Butyrate Thinner** and proceed as written above.

❒ When it comes time to respray the color coat of **Ranthane,** you can't spot spray it over just the repair. It won't blend in without a halo of overspray. Sorry about that.

The best bet is to spray the whole panel the repair is in. For instance, if the repair is on a wing, mask and spray the area from rib to rib to match the paint best.

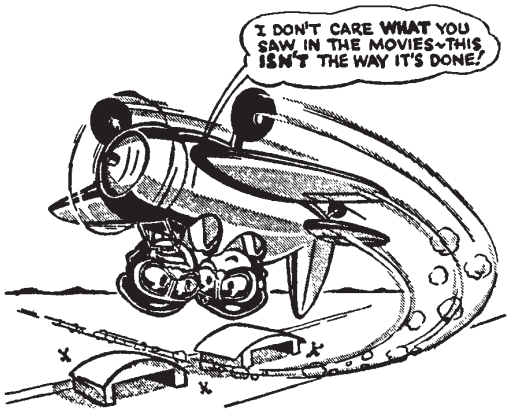

# Appendix F: Airworthiness Limitations

1. As a minimum, fabric and coatings must be inspected once a year as part of the aircraft's annual inspection.

2. If for any reason the fabric's integrity is questioned, the fabric must have a breaking strength of 56 pounds per inch or more to be airworthy.

3. This 56 pounds per inch minimum is required for fabric manufactured to the standards of FAA Technical Standard Order (TSO) C-15 d/AMS 3806c. Our **Ceconite 101** and **Ceconite 102** fabrics are manufactured to TSO C-15d standards.

4. Inspection procedures: See Appendix G, Inspecting Fabric and Coatings, of this manual for complete inspection procedures.

5. The Airworthiness Limitations Section is FAA approved and specifies maintenance required under Secs. 43.16 and 91.403 of the Federal Aviation Regulations unless an alternative program has been FAA approved.

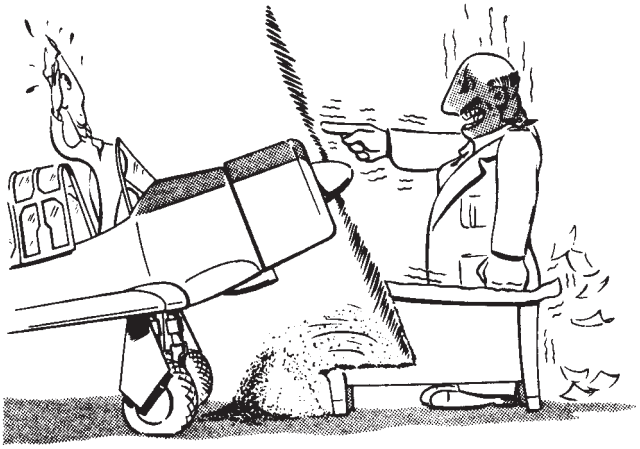

It's always a good idea to make sure your brakes are in working order before taxiing.

# Appendix G: Inspecting Fabric and Coatings

**Ceconite** fabric and the coatings and paint applied to it must be inspected each year at annual.

The core concept is that the paint and coatings should remain in good shape to protect the underlying fabric, so the condition of the paint and coatings is important. The age of a cover job is irrelevant; good jobs easily last 25 years, some much more than that. If the job was done correctly with plenty of UV blocking silver, it will last indefinitely, well past the time when a smart owner will want to uncover the airplane to see the state of the airframe under the fabric.

Remember that UV radiation is the only thing that can degrade polyester **Ceconite** fabric; it is not affected by gasoline, fungus, rot, or weather extremes. So if you want to protect the fabric, you have to have a "sheet of metal" between the fabric and the sun. That sheet of metal is in fact, the aluminum flake in **Rand-O-Fill.** The bottom line is: if there is sufficient aluminum to block and reflect the passage of light, it also blocks the passage of damaging invisible UV radiation.

## Inspection Procedures

Here are the steps an experienced IA will take. If he is unfamiliar with inspecting fabric, show him these procedures:

1. Inspect the general condition of the paint and coatings. If the fabric is flexible and resilient when pushed hard with a knuckle: Good!

2. Find a way to view the fabric from the inside out. On fuselages, this can be done by removing sufficient interior components to see the inside. On wings or some tail feathers, this can be done by removing an inspection cover so you can see the inside surface of the fabric. Have an assistant hold a **60-watt** shop light one foot from the outside surface to simulate sunlight. As you view the fabric from the inside, there should be enough silver **Rand-O-Fill** so that no light is visible from the shop light held a foot off the surface outside.

   If the coatings and paint block the light: Good!

**BASED ON PASSING THESE TWO TESTS ALONE, THE IA COULD HAVE CONFIDENCE THAT THE FABRIC IS AIRWORTHY.**

## The Problem Scenarios

1. The paint and coatings are brittle, cracked and ringwormed. They readily crack when pushed with a knuckle: Bad!

   Consider rejuvenation. (**Colored Butyrate** only; you can't rejuvenate polyurethanes.) Rejuvenation softens and adds service life.

BUT, as long as there are no big chunks out of the paint, and there is no sun-exposed fabric, the airplane is still airworthy, but should be monitored for problems continually until the next annual inspection.

2. Big chunks out of the paint and coatings, advance peeling, sun exposed fabric: Real Bad! The IA can use a Maule Fabric Tester on the bare fabric as an aid to see if there is UV damage.

**AC 43.13 - 1B states that a Maule Tester is not approved for determining airworthiness; it is only an aid. Also, Maule Testers only give accurate readings on bare fabric.**

**It does no good to "punch" painted fabric; you are measuring the combined strength of the paint and fabric. The FAA only cares about the fabric. To use the Maule, push until it reads 56 pounds; no need to push further and punch a hole in the fabric unless the IA is seeking additional business repairing unnecessary holes.**

3. If the Maule Tester indicated that the fabric is questionable: do the "Hang it on the wall test." This is a simplified version of an FAA acceptable field test for fabric testing that is published in the fabric covering section of AC 43.13 - 1B.

## The "Hang It On the Wall" Test

1. Cut a strip of fabric from the sun-exposed area of the aircraft (hopefully the top) four inches long by one and one-quarter inches wide. Clean all the coatings and paint off the fabric strip by soaking it in MEK or Butyrate Thinner.

2. Unravel a few threads from the side so it has a small "fringe". The unraveled fabric should be one-inch wide.

3. Figure out a sturdy way to hang the strip on a wall; put an equally sturdy hook on the other end. An easy way to do this is to sandwich the fabric ends between two pieces of metal or wood held together with hardware. Strengthen the sandwich by wrapping and cementing one end around one of the pieces of wood or metal to prevent slippage.

4. Put a bucket on the hook and fill it with 56 pounds of sand, lead, gold, or anything heavy you can accurately weigh. Don't forget to account for the tare weight of the bucket.

**IF THE FABRIC BREAKS WITH 56 POUNDS, IT FAILS. TIME TO RE-COVER.**

**Where does this 56 pounds come from? Ceconite fabrics are manufactured to the standards of TSO-C-15d/AMS 3806C. Interestingly, this is the same standard used**

**for Grade A Cotton, linen, or any fabric used in direct replacement. This document specifies how aircraft fabric should be manufactured, and all certified fabric used on aircraft is approved by FAA engineers based on these standards. TSO C-15d says that new aircraft fabric has to have a breaking (tensile) strength when new of at least 80 pounds per inch. (Ceconite is well over 102 pounds.) In service, the fabric is allowed to degrade to 70% of that 80 pounds, which works out to 56 pounds. So 56 pounds is the minimum allowable for airworthiness.**

If for some reason the breaking strength is still in question, you may send the fabric to any certified testing facility to do an ASTM D5035 test on the fabric. Here at Ceconite, 1-800-362-3490, we will do the test for you for a small fee.

# Notes

# Appendix H: Product Profiles

## POLYESTER FABRICS

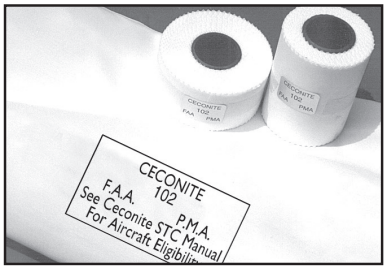


### CECONITE 101

This heavy duty fabric is recommended for the most severe operating conditions and for very high-wing loaded aircraft. Its large filament size and high strength provide excellent rock and tear resistance. It finishes well and fills with normal applications of dope to a smooth surface. Meets the requirements of TSO C15d.

**RECOMMENDED AIRCRAFT:**
Aerobatic and bush planes, ag aircraft, and warbirds.

### CECONITE 102

Ceconite 102 is considered our standard fabric. It is a good replacement in finish for Grade A Cotton. Recommended for all service on a wide variety of aircraft regardless of wing loading or horsepower. Meets TSO C-15d.

**RECOMMENDED AIRCRAFT:**
All classics, antiques and contemporary designs that anticipate normal on-airport operations.

### CECONITE UNCERTIFIED LIGHT

Uncertified light is recommended for covering plywood surfaces on any aircraft and on any ultralight aircraft that is not certified. On certified aircraft, it is only approved for covering plywood surfaces. This fabric is unstamped.

**RECOMMENDED AIRCRAFT:**
Experimental ultralights and very light and experimental aircraft only.

## SURFACE TAPES

**NOTE: ALL STYLES AND WEIGHTS OF CECONITE SURFACE TAPES ARE LEGAL FOR USE ON ANY OF THE THREE CECONITE FABRICS**

### CECONITE 102 TAPES

#### PINKED EDGE C-102 TAPES

Our classic standard duty tape most generally used on Ceconite 101 and 102 fabric. All pinked C-102 tapes comes in 25-yard rolls except 2″ which comes in a 50-yard roll. Offered in widths from 1″ to 6″.

#### STRAIGHT EDGE C-102 TAPES

Designed for Citabrias, these tapes have a heat-slit straight edge. All straight edge C-102 tapes come in 50-yard rolls only. Offered in widths from 1″ to 6″.

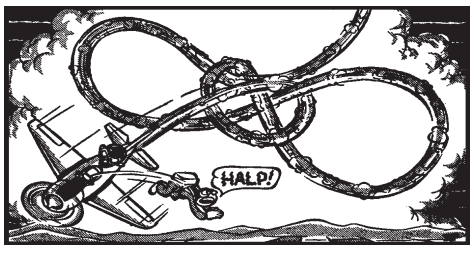


## CECONITE LIGHT TAPES

#### PINKED EDGE LIGHT TAPES

These light tapes form easily around rib laces and structure. They are legal for use on any aircraft. They are offered with pinked edges only. They come in 25-yard rolls, except 2″ which comes in a 50-yard roll. Offered in widths from 1″ to 6″.

## CECONITE BIAS TAPES

#### PINKED EDGE BIAS TAPES

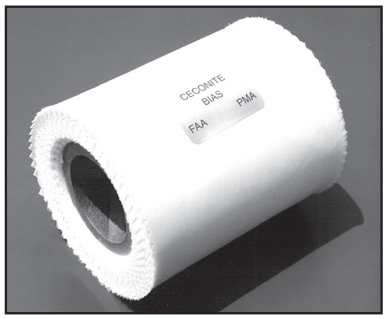


Bias tapes are designed to form around curved shapes like wing tip bows and tailfeathers without heat shrinking or notching. All have pinked edges and come in 25-yard rolls. They are offered in either 2, 3, or 4″ widths. When pulled around curves, they shrink about ⅓ their normal width. In other words, a 3″ bias tape will pull down to 2″ wide when stretched around a curve.

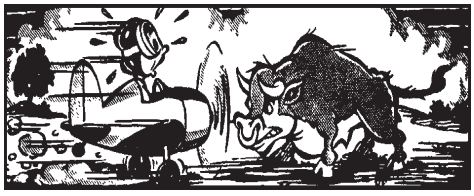

# OTHER TAPES

## POLYESTER REINFORCING TAPE

Reinforcing tapes are used to strengthen the fabric to resist cutting under rib lacing, pop rivets, or PK screws. Reinforcing tapes are applied directly over the fabric that overlies rib cap strips. Rib lacing or other mechanical attachments are then applied over or through the reinforcing tape. Reinforcing tapes are made of an extremely strong polyester twill with a sticky back for ease of application.

Reinforcing tapes are offered in ¼, ⅜, and ½ inch widths. When rib lacing, select the same exact width tape as your rib cap strip, no more, no less. If your ribs are wider than ½ inch, use two or more tapes positioned side by side. When using screws, rivets. or clips, use ½-inch tape for all rib widths.

## CLOTH ANTI-CHAFE TAPE

Used to mask and smooth sharp corners and metal edges under fabric. Apply to any substructure that requires additional padding or has protrusions that could chafe the fabric. Apply before covering.

Comes in a 60-yard roll. Resistant to moisture over the years and will not discolor.

## INTER-RIB BRACING TAPE

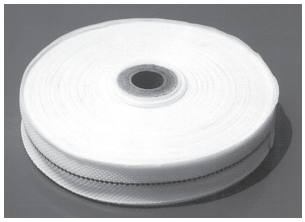

Polyester twill used to brace ribs before covering. See manual for use. Comes in a roll 36 yd by ½˝.

# THREADS

## POLYESTER MACHINE SEWING THREAD

10 lb tensile strength 4-ply thread. Packaged 500 yards per spool.

## POLYESTER HAND SEWING THREAD

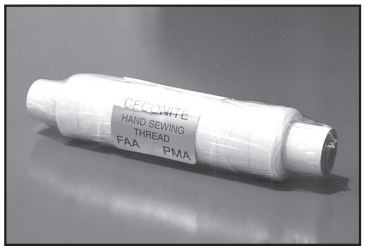


15 lb tensile strength. 3-ply uncoated thread. Packaged 250 yards per spool.

# POLYESTER RIB LACING CORD

Two styles of lacing cord are available, both impregnated with micro-crystalline fungicidal wax.

1 - Standard round 4 ply, .035˝ dia., 60 lb tensile strength. Packaged 600 yards per spool.

2 - Flat braided cord, .012˝ thick x approximately .080˝ wide, 50 lb tensile strength. Recommended when the minimum rib cord protrusion is desired. Packaged 500 yards per spool.

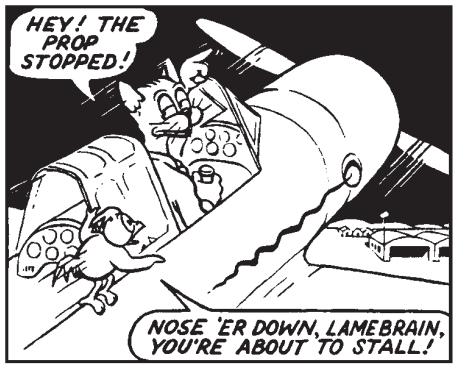


# POLY-FIBER IRON CALIBRATION THERMOMETER

Made specifically for “taking your iron’s temperature” when calibrating it. Scale has 225°, 250°, and 350° settings. Accurate ±10°.

# FABRIC CEMENT

## NEW SUPER SEAM

**Use: New Super Seam** is an improvement of the original Ceconite Super Seam Cement. This new formulation is clear, vinyl-based cement that may be over coated with all Randolph dopes with no incompatibilities. **New Super Seam** has twice the peel strength of original nitrate-based Super Seam or **Rand-O-Bond.** The "New" on the can differentiates **New Super Seam** from the original.

**Note: New Super Seam** is a **vinyl-based** cement that **should not be added to nitrate dope** to enhance dope adhesion. In the past, some erroneously added nitrate cements like **Rand-O-Bond** or Super Seam to nitrate dope to help tape adhesion. In fact, while this seemed to help in applying tapes, the high solids mixture that resulted from this unwise addition actually promoted tape delamination during service life. In any case, **DO NOT add New Super Seam to nitrate dope for any reason.**

**Packaging:** Gallons, quarts.

**Mixing:** Use directly out of the can with no mixing. If the cement thickens or begins to dry in use, add MEK to bring it back to original viscosity.

**Application:** Apply with a one-inch brush directly to the surface. Lay the fabric directly into the wet cement and force the cement through the weave with protected fingers or a squeegee. Cement only 12 to 18 inches at a time to prevent the cement from drying. Cement directly to epoxy-primed metal, epoxy-varnished wood, or epoxy-primed composite surfaces.

**Shelf Life:** Guaranteed two years unopened. Temperatures over 100° F can damage the cement. If the cement has been exposed to heat in storage, it will turn whiskey colored. Do not use cement unless it is perfectly clear.

# ACID TREATMENTS FOR ALUMINUM

Acids are used to prepare aluminum for priming and painting. **E-2310 Phosphoric Acid Etch** is used to clean only old aluminum prior to priming. It is not necessary on new aluminum. **E-2300 Chromic Conversion** is used on both new and old aluminum prior to priming and painting. On old aluminum, it is used after **E-2310 Phosphoric Acid Etch.** On new aluminum, **E-2300** is the only treatment required. Acid treatments insure the best possible corrosion control and primer bond for painted aluminum.

## E-2310 PHOSPHORIC ACID ETCH

**Use: Phosphoric Acid Etch** is used on old aluminum after stripping or directly on weathered aluminum that has never been painted. **Acid Etch** burns away oxidation and removes light contaminates. It also brightens unpainted weathered aluminum to prepare it for polishing and waxing.

**Packaging:** One-quart and one-gallon plastic bottles.

**Coverage:** One gallon will treat approximately 1000 square feet of aluminum.

**Mixing:** Combine one part **Phosphoric Etch** with two parts clean water in a plastic, porcelain, or stainless steel container.

**Application:** Wear rubber gloves and eye protection. Apply water-diluted solution with a sponge or brush, keeping the surface wet from 1 to a maximum of 5 minutes. The longer the solution contacts the aluminum the greater the effect. Scrub heavily corroded surfaces with an ultra-fine Scotch-Brite pad. Rinse with cold water and follow with a clean rag.

**NOTE:** Acid residue must be removed from rivets heads or seams; air blow areas where acid could be trapped.

**Shelf Life:** Guaranteed four years in an unopened container in protected storage. Avoid long-range storage above 100° F. Avoid freezing.

## E-2300 CONVERSION COATING

**Use: Conversion Coating** provides a clear passive oxide coating on aluminum (unlike Alodine which leaves a gold colored coating). This oxide coating serves two purposes: it helps prevent corrosion and forms a very fine textured surface to help primer bond. On old aluminum, first etch with **E-2310 Phosphoric Acid Etch,** then apply **E-2300 Conversion Coating** within 8 hours. No need to use **E-2310** on new aluminum; the only product required is **E-2300 Conversion Coating.**

**Packaging:** One-quart plastic bottles. Not available in gallon bottles.

**Coverage:** One quart will treat approximately 250 square feet of aluminum.

**Mixing:** Combine one part **E-2300 Conversion Coating** with two parts water in a plastic, stainless steel, or porcelain container.

**Application:** Use rubber gloves and eye protection. Apply with a brush or sponge; keep the surface as wet as possible for 5 to 7 minutes. Rinse with clean water or wet rags to neutralize and flush. Insure that all residue is wiped off with clean rags. Unlike Alodine, **E-2300** does not change the color of the aluminum; therefore **E-2300** may be used over buffed natural aluminum.

**Shelf Life:** Guaranteed four years in an unopened container in protected storage. Avoid long-range storage above 100° F. Avoid freezing.

# EPOXY PRIMERS

## W-2248 EP-420W EPIBOND EPOXY PRIMER (WHITE)

## B-6433 EP-420G RAND-O-PLATE (DARK GREEN)

**Epoxy primers** come in two colors: white or dark green. Both have identical properties and ingredients and vary only by color. Cured epoxy primers are completely solvent resistant and are not wrinkled or lifted by fabric cements or dopes. White is the easiest color to use under any color paint and is always a better choice for aluminum, steel, or composites that will be topcoat painted. Dark green is actually white primer tinted green for those who want to simulate the color of WWII zinc chromate on warbirds. There are three parts to an epoxy primer kit: (1) **EP-420 Primer,** (2) **EP-430 Catalyst,** and (3) **E-500 Thinner.** All are required, and there are no substitutes.

**Use: Epoxy primer** is used to coat steel, aluminum, and composite surfaces before painting. It has superior anti-corrosive properties that exceed one-part zinc chromate primers in all levels of performance. **Epoxy primers** may be used under **Mark II for Metal**, **Ranthane Polyurethane,** and a variety of other topcoat paints. **Epoxy primers** may be applied directly over old one-part primers like zinc chromate or red iron oxide to provide a solvent-proof barrier coat to protect from fabric cements and dopes.

**Packaging:** Each component (**Primer, EP-430 Catalyst, and E-500 Thinner)** is sold individually or as part of a kit.

**Gallon Kit:** 1 gallon **Epibond** or **Rand-O-Plate Epoxy Primer**, 2 quarts **EP-430 Catalyst,** 1 gallon **E-500 Thinner.** Yield: 2½ gallons sprayable primer when mixed.

**Quart Kit:** 1 quart **Epibond** or **Rand-O-Plate Epoxy Primer,** 1 pint **EP-430 Catalyst,** 1 quart **E-500 Thinner.** Yield: 2½ quarts of sprayable primer when mixed.

**Coverage:** One gallon of catalyzed thinned primer will cover approximately 1000 square feet with one coat.

**Mixing and Thinning:** Primer may hard settle in storage. Make sure all compacted material is mixed well with a paddle to get everything off the bottom of the can. Once paddled, agitate on a paint shaker for 5 minutes, minimum.

1. Add **exactly** two parts **Primer** to one part **EP-430 Catalyst.** Stir thoroughly and allow sitting for 30 minutes induction time before thinning.

2. Add 50% **E-500 Epoxy Thinner** (two parts catalyzed primer to one part **E-500 Thinner.**) Additional thinning may be required in warm weather or with some spray rigs.

**Application:** Use spray equipment rated for lacquers or enamels. Spray three light coats 20 minutes apart, allowing each coat to become tacky before spraying another. Do not flood or apply thick coats as you would automotive filler primers; crawling or cratering will result. Unlike automotive primers, this aerospace primer is put on in light coats and does not dry with a chalky texture. When three coats have been applied, the result will be a slick, hard surface that may be slightly transparent. There is no need to paint over the top of **Epoxy Primer** when used in internal structural components like 4130 steel tube fuselages or aluminum wings. The primer itself is sufficient to act as an internal coating. Scuff sand cured epoxy primer with an ultrafine Scotch-Brite pad and wipe with a cloth slightly damp with **C-2210 Paint Cleaning Solvent** before applying topcoat paint.

**Dry/Cure Time: Epoxy primer** will dry to the touch in 30 to 60 minutes in most conditions. **However, it takes a full seven days at 70° to chemically cross-link to full solvent resistance.** So in simplest terms, if you rush applying solvent-borne topcoat paints or fabric cement over the top of primer that has not cured for seven days, you risk wrinkling the primer. This is most probable in the hours immediately following primer application. As time passes in the seven-day cross linking period, the primer gets more solvent resistant and the probability of wrinkling decreases. After seven days, it is impervious to all solvents.

**Pot Life:** The sooner applied after induction, the better the service life durability. Maximum pot life is seven hours at 70°. Discard mixed primer when it increases in viscosity or becomes stringy. Do not add thinner to "save" primer that has become viscous or is beginning to harden.

**Cleanup:** Use **E-500 Epoxy Thinner.** MEK may be substituted but does not clean tools and spray guns as well as **E-500 Epoxy Thinner.** Do not allow primer to dry in the gun; it will be almost impossible to remove. Clean gun as soon as you finish work.

**Shelf Life: Primer and Thinner**, four years in an unopened container; **Catalyst**, two years in an unopened container.

## EP-430 EPOXY PRIMER CATALYST

**Use: Catalyst** for either **Epibond White Epoxy Primer** or **Rand-O-Plate Green Epoxy Primer.**

**Packaging:** One-pint and one-quart cans.

**Shelf Life:** Two years in an unopened container. Avoid storage above 100° F.

**Use:** See instructions under epoxy primers above.

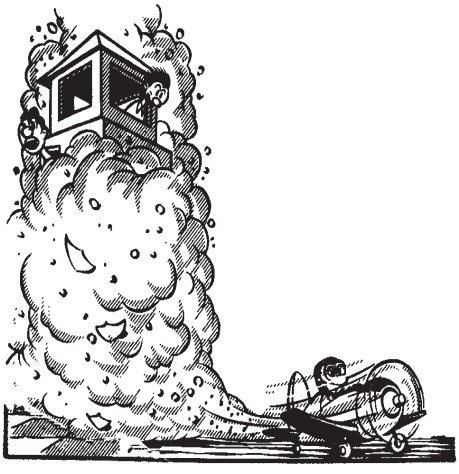

## E-500 EPOXY THINNER

**Use:** Used to thin **Epibond** and **Rand-O-Plate** primer as well as **EV-400 Epoxy Varnish.** Follow thinning directions on the primer and varnish cans. Do not substitute other solvents or thinners in these epoxy products.

**Packaging:** One-quart and one-gallon cans.

**Shelf Life:** Unlimited in closed containers.

## EX-501 EPOXY ACCELERATOR

**Use:** Accelerates the drying time of epoxy primer or varnish in cold weather.

**Packaging:** Half pints only.

**Application - Epoxy Primers:** Add one to a maximum of two fluid ounces of **accelerator** to a quart of catalyzed and thinned epoxy primer. Do not exceed 2 fluid ounces per quart.

**Application - Epoxy Varnish:** Add one to a maximum of three fluid ounces to a quart of catalyzed and thinned varnish. Do not exceed 3 fluid ounces per quart.

# VARNISH

## EV-400 EPOXY VARNISH

**Use: EV-400 Epoxy Varnish** is a two-part varnish that gives superior protection and performance over older one-part "spar" varnishes. **EV-400** is completely impervious to fabric cements and dope when cured, so there is no need to use a dope-proof paint over it. Epoxy varnish may be used on either old or new wood. It can be brushed or sprayed and is applied without harm directly over old varnishes to provide superior solvent resistance and protection from fabric cements and dopes.

**Packaging:** Each component (**Varnish, EV-410 Catalyst,** and **E-500 Thinner**) is sold individually or as part of a kit.

**Gallon Kit:** 1 gallon **EV-400 Varnish,** two quarts **EV-410 Catalyst,** one gallon **E-500 Epoxy Thinner.** Yield: 2.5 gallons when all components are mixed.

**Quart Kit:** 1 quart **EV-400 Varnish,** one pint **EV-410 Catalyst,** one quart **E-500 Epoxy Thinner.** Yield: 2.5 quarts when all components are mixed.

**Coverage:** One gallon **Epoxy Varnish** base component catalyzed and thinned 25% will cover approximately 600 sq ft with one coat.

**MIXING PROCEDURE:** Add exactly one part **EV-410 catalyst** to 2 parts **EV-400** base component. Ratio must be accurate for best characteristics. Stir thoroughly and allow 30 minutes induction time before thinning. In high humidity weather allow 1 hour induction time to avoid curing agent "bloom." Avoid shaking which causes small bubbles in thick solution. Thinning eliminates bubbles. Filter thru a 60x48 mesh or finer paint strainer cone.

**THINNING – New Wood:** After the **EV-400** and **EV-410** components are mixed, reduce 50% with **E-500 Epoxy Thinner** (2 parts catalyzed varnish to 1 part **Thinner**) and brush on for good surface penetration. Second and optional third coats may be brushed or sprayed on using following spray gun directions.

**Spray Gun Directions:** After the **EV-400** and **EV-410** components are mixed, thin 25% with **E-500 Epoxy Thinner** (4 parts catalyzed **Varnish** to 1 part **Thinner**) (19 to 21 seconds with a #2 Zahn viscosity cup). Additional thinning may be required in hot climates. Three spray coats are recommended at 3 to 4 hour intervals.

**Floorboard Application:** After two to three sprayed-on coats at 25% reduction, immediately spray on a fourth coat reduced 50% with **E-500 Epoxy Thinner** which will bite into initial coats and flow out to provide a smoother, higher gloss.

**CURE ACCELERATION:** To shorten the cure time in cold weather, add **EX-501 Epoxy Accelerator** at a ratio of 1 to a maximum 3 liquid oz to 1 qt of catalyzed **Varnish**, unthinned. Stir thoroughly. One oz of **EX-501** will reduce the pot life from 5 hours to 3 hours and the curing time from approximately 7 days to 4 days at 70°F. Do not exceed 3 oz per qt.

**APPLICATION PROCEDURE: Epoxy varnish** may be applied with any spray equipment rated for lacquer or enamel. Flooding spray or brush coats will cause crawling and cratering over old finishes or dry first coats on new wood. Recommended dry coat thickness 1 to 1.5 mils. Contamination from oil base coatings leaching from old pressure pot hoses or contamination from unclean or soluble plastic or plastic lined containers used for mixing or measuring will cause crawling. Spray gun head should be dismantled to remove residue from previous coatings before applying **Epoxy Varnish.**

**POT LIFE:** The sooner **Epoxy Varnish** is applied after the induction period, the better the durability. Maximum pot life is five hours at 70°F. Discard materials when viscosity increases or becomes stringy when tested between the fingers. Do not add **Thinner** to extend pot life after thickening occurs. Mix material fresh for each coat.

**CLEAN UP:** Use **E-500 Epoxy Thinner** for final flush cleaning before the varnish starts to polymerize in the equipment. MEK does not dissolve and flush all the epoxy resin from the equipment.

**DRYING AND FULL CURE TIME:** Dry to handle 3 to 5 hours. Full cure to develop solvent and chemical resistance is 7 days at 70°F. Lower ambient temperatures require a proportionally longer period. Full cured varnish will not be lifted by adhesives, fabric coatings, enamel or lacquer top coats.

**RECOATING: Varnish** coats which have aged more than 4 days should be dry scuff sanded with fine sandpaper or Scotch-Brite pads to break the gloss surface and provide tooth adhesion. Wipe the scuffed surface with **C-2210 Paint Surface Cleaner** using new, clean rags or paper towels to thoroughly remove the sanding residue.

**SHELF LIFE:** Guaranteed shelf life, unopened, in protected storage at room temperature is four years from date of manufacture. Avoid long-range storage above 100°F. Not affected by freezing.

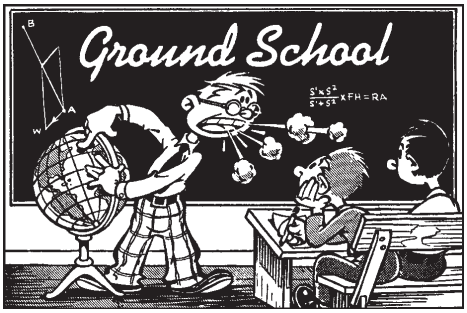


## EV-410 EPOXY VARNISH CATALYST

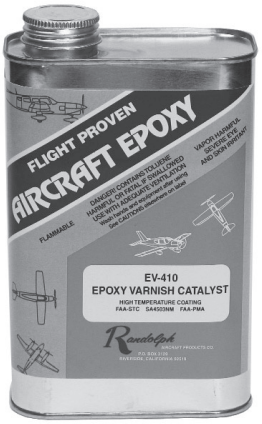


**Use: Catalyst** for **EV-400 Epoxy Varnish** only. Add one part **EV-410 Catalyst** to two parts **EV-400.**

**Packaging:** One-pint and one-quart cans.

**Shelf Life:** Guaranteed two years unopened. Avoid storage above 100° F.

# TAUTENING DOPE PRODUCTS FOR USE ON COTTON OR LINEN ONLY

## 210 TAUTENING NITRATE DOPE (CLEAR)

**Use: 210 Nitrate Dope** is used to seal and shrink organic fabrics: Grade A Cotton, Irish Linen, or silk and silkspan for model airplanes. It is not recommended for use on **Ceconite** or other synthetic polyester

fabrics. Polyester fabrics are shrunk by the application of heat; applying tautening dope after heat shrinking can produce undue tightening of the fabric and deformation of underlying structure.

**NOTE:** We recommend using only **9701 Butyrate Dope** on Grade A Cotton or Irish Linen. **Butyrate Dope** is superior in all ways to nitrate dope on organic fabrics. We offer nitrate only for model airplanes or exact antique restorations where service life is not important.

**Packaging:** Quarts, gallons, 5-gallon pails, and 55-gallon drums.

**Coverage:** One thinned gallon covers approximately 200 square feet.

**Thinning:** Thin to spray viscosity with **286 Nitrate Thinner** usually one to one.

**Application:** For best results, apply using a spray gun. Allow each coat to dry before spraying another. Do not rush coats; all dopes work best when ample drying time is allowed between coats. In cool or humid weather, slow down application or wait for better weather. Applying multiple thick coats in a hurry can cause splitting or wrinkling of the dope film.

**Dry Time:** 15 to 45 minutes, depending upon temperature and thinning.

**Shelf Life:** 2 years unopened. Do not store in excessive heat. Dope should be clear, do not use if discolored to a brown or golden color.

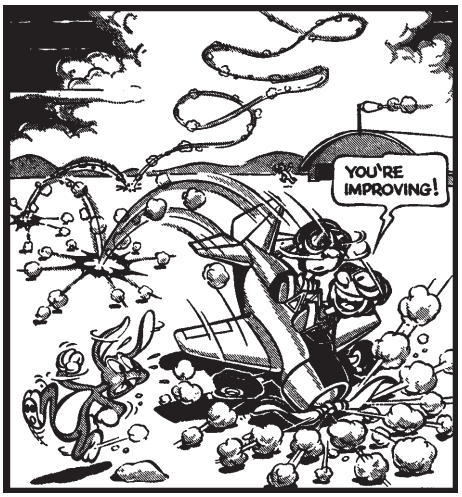


## 9701 TAUTENING BUTYRATE DOPE (CLEAR)

**Use: 9701 Tautening Butyrate Dope** is used to shrink and seal organic fabrics, Grade A Cotton and Irish Linen. Apply in multiple coats until the fabric reaches an acceptable level of tightness. Due to its shrinking characteristics, it is not recommended for use on **Ceconite** or other polyester synthetic fabrics. Polyester fabrics are shrunk primarily by heat; also applying a tautening dope after heat shrinking could produce undue tightness and deformation of the underlying structure. **9701 Tautening Butyrate Dope** is the recommended product for use on organic fabric rather than **210 Tautening Nitrate Dope.**

**Packaging:** Quarts, gallons, 5-gallon pails, and 55-gallon drums.

**Coverage:** One thinned gallon covers approximately 200 square feet with one coat.

**Thinning:** Thin to spray viscosity with **9703 Butyrate Thinner,** usually one to one.

**Application:** For best results, apply with a spray gun. Allow each coat to dry before spraying another. Do not rush coats; dopes work best when ample drying time is allowed between coats. In cool or humid weather, slow down application time or wait for better weather. Applying multiple thick coats in a hurry can cause film splitting or wrinkling.

**Dry Time:** 15 to 45 minutes, depending upon temperature and humidity.

**Shelf Life:** Four years unopened.

# NON-TAUTENING NITRATE DOPES FOR USE ON CECONITE

## G-6302 RAND-O-PROOF (GREEN)

**Use: Rand-O-Proof** is a non-tautening nitrate dope specially formulated for the first coats on **Ceconite** polyester fabric. It is also used to apply finishing tapes and to pre-coat large surfaces of wood or metal that will be covered with fabric. Pre-coating wood or metal with nitrate dope promotes adhesion and helps prevent pinholes in subsequent coatings. **Rand-O-Proof** is tinted transparent green for visibility upon application. **Nitrate dope** is always applied as a first coat to **Ceconite;** butyrate dope of any form will not stick to polyester fabrics.

**Packaging:** Quarts, gallons, 5-gallon pails, and 55-gallon drums.

**Coverage:** One thinned gallon covers approximately 200 square feet with one coat. See material estimates in the rear of this manual for the amount suggested for specific aircraft.

**Thinning:** Thin to spray viscosity with **286 Nitrate Thinner,** usually one to one.

**Application:** For best results, brush on the first coat of thinned **Rand-O-Proof.** Spraying the first coat will result in poor penetration of the fabric weave and subsequent poor adhesion. **Ceconite** polyester fabric will not absorb liquids; therefore, the first coat must encapsulate both sides of the fabric for proper adhesion. The best way to encapsulate is to brush the first coat; when done properly, the mechanical action of brushing wets both sides of the

fabric with no runs on the inside surface. Avoid inside runs; they may show when the aircraft is finished. Tapes are applied with **Rand-O-Proof,** thinned one to one. Do not add **any** type fabric cement to **Rand-O-Proof** when applying fabric tapes; doing so will degrade long-term tape adhesion. Once tapes are applied, two additional coats of thinned **Rand-O-Proof** are sprayed over the taped aircraft surfaces.

**Dry Time:** Fifteen to thirty minutes, depending upon temperature and humidity.

**Shelf Life:** Two years unopened.

### W-7868 NON-TAUTENING NITRATE DOPE (BLUE)

**Use: W-7868 Non-tautening Nitrate Dope** is used exactly as **G-6302 Rand-O-Proof** (see above). The major difference is the color. Packaging, coverage, mixing, thinning, application, dry time and shelf life are identical to **Rand-O-Proof.**

### E-4964 NON-TAUTENING NITRATE DOPE (CLEAR)

**Use: E-4964 Non-tautening Nitrate Dope** is used exactly as **G-6302 Rand-O-Proof** (see above). **E-4964** is completely clear and is used on open-cockpit aircraft fuselages or anyplace where tinted nitrate is not desired. Packaging, coverage, mixing, thinning, application, dry time, and shelf life are identical to **Rand-O-Proof.**

### 286 NITRATE THINNER

**Use: 286 Thinner** is used to reduce **G-6302 Rand-O-Proof, W-7868 Non-tautening Nitrate Dope** (Blue), and **E-4964 Non-tautening Nitrate** (Clear).

**Packaging:** Quarts, gallons, 5-gallon pails, and 55-gallon drums.

**Mixing:** Usually mixed one to one with nitrate dopes for brushing or spray viscosity.

**Shelf Life:** Unlimited in closed containers.

## NON-TAUTENING BUTYRATE DOPES FOR USE ON CECONITE

### W-8350 NON-TAUTENING CLEAR BUTYRATE (TRANSPARENT TAN)

**Use: W-8350 Clear Butyrate** is the recommended second product applied to fabric in sequence over the nitrate dope coats in the **Ceconite/Randolph** process. **Nitrate dope** is used only for the initial coats on **Ceconite;** butyrate is used for all others. **Clear butyrate** is used as a build coat to add thickness and body to the dope film while retaining flexibility. **W-8350 Clear Butyrate** is tinted transparent tan to help see the product as it is applied.

**Packaging:** Quarts, gallons, 5-gallon pails, and 55-gallon drums.

**Coverage:** One thinned gallon will cover 200 square feet with one coat. See material estimates section in the rear of this manual for an estimate for a specific aircraft.

**Thinning:** Thin to spray viscosity with **9703 Butyrate Thinner,** usually one to one.

**Application:** For best results, apply with a spray gun. Allow each coat to dry before spraying another. Do not rush coats; dopes work best when ample drying time is allowed between coats. As a rule of thumb, two coats a day is a good spraying rate. In cold or humid weather, slow down application time, use **Y-9910 Blush Retarder,** or wait for better weather. Applying multiple thick coats in a hurry can cause film splitting or wrinkling. Wet-sand the last coat with 320 wet or dry sandpaper.

**Dry Time:** 15 to 45 minutes, depending upon temperature and humidity.

**Shelf Life:** Four years unopened.

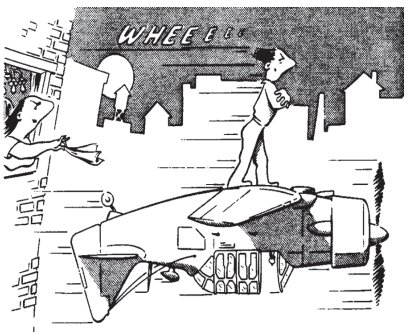

### A-1690 NON-TAUTENING BUTYRATE (CLEAR)

**Use: A-1690 Clear Non-tautening Butyrate** is used exactly like **W-8350 (Transparent Tan) Butyrate** described above. It is made with no tint at all for surfaces that will be seen from the inside, like an open cockpit. Packaging, coverage, mixing, thinning, application, dry time and shelf life are exactly like **W-8350.**

### G-6303 RAND-O-FILL (SILVER)

**Use: G-6303 Rand-O-Fill** is the third product applied in sequence over fabric in the **Ceconite/Randolph** system. It is a pre-mixed silver butyrate dope that primarily provides UV protection for fabric. Four cross coats (one cross coat is two coats sprayed perpendicular) are usually sufficient to provide lasting UV protection. Fewer coats will provide less protection and will markedly shorten the service life of the fabric.

**Packaging:** Quarts, gallons, 5-gallon pails, and 55-gallon drums.

**Coverage:** One thinned gallon covers approximately 200 square feet with one coat. See the material estimates section in the rear of this manual for the amount suggested for specific aircraft.

**Mixing:** Stir thoroughly with a paint paddle before using; insure all the silver is bladed from the bottom of the can. Then put the can on a double-action paint shaker for at least five minutes to insure that all the silver is in suspension.

**Thinning:** Thin to spray viscosity with **9703 Butyrate Thinner,** usually one to one.

**Application: Rand-O-Fill** must be sprayed in even coats to insure proper UV protection for fabric. Four cross coats are usually sufficient (two coats sprayed perpendicular).

Do not rush coats, dopes work best when ample drying time is allowed between coats. As a rule of thumb, two cross coats a day is a good spraying rate. In cool or humid weather slow down the application time, use **Y-9910 Universal Retarder,** or wait for better weather. Wet-sand as necessary between coats with 320-grit sand-paper. Insure all sanding residue is washed off to insure proper adhesion of subsequent coats.

**Dry Time:** 15 to 45 minutes, depending upon temperature and humidity.

**Shelf Life:** Four years unopened.

### 9703 BUTYRATE THINNER

**Use: 9703 Butyrate Thinner** is used to reduce all butyrate products, tautening or non-tautening, to spray viscosity. It is normally used 1:1 with butyrate dopes.

**Shelf Life:** Unlimited in unopened clean containers.

## FAA APPROVED TOPCOAT PAINTS FOR CECONITE FABRIC

### COLORED NON-TAUTENING BUTYRATE DOPE

**Use: Non-tautening Colored Butyrate Dope** is the final color coat applied over fabric in the **Ceconite/Randolph** system. **Randolph Colored Butyrate Dope** is FAA approved as topcoat paint used over **Ceconite.** The only other FAA approved choice for use on **Ceconite** fabric is our **Ranthane** polyurethane; no other topcoat may be used under the **Ceconite** STC. **Both Colored Butyrate Dope** and **Ranthane** are available in 50 standard colors which represent the most popular classic colors from the vintage years of aviation. These colors are available in any quantity from Randolph distributors; they are produced on tinting machines to a standard formula in each distributor's facility. **Colored Butyrate Dopes** produced on a tinting machine match the samples on the 2004 Randolph color card but may not be exact matches for colors made in batches in past years at the old Randolph facility. Additionally, dopes age over time and thus change color no matter how well protected the aircraft is in storage. When repairing dope finishes, hold a 2004 Randolph color card up to the existing finish to check for the best color match. Do not rely on color names or numbers alone; the color card is the only way to determine a match with paints produced today from tinting machines. The **Ceconite/Randolph** system with **Colored Butyrate Dope** topcoat has the advantage of ease of repair and the ability to be rejuvenated to increase service life.

**Packaging:** One-gallon and one-quart cans only. Since all colors are produced on tinting machines, 5-gallon pails and 55-gallon drums are not available.

**Coverage:** One thinned gallon covers approximately 200 square feet with one coat. NOTE: Yellow and red are translucent colors; for best coverage and hide, use white dope as a pre-coating. See estimates for specific aircraft in the rear of this manual.

**Mixing:** Thin to spray viscosity, usually one to one, with **9703 Butyrate Thinner.**

**Application:** For best results, apply with a spray gun. Three coats are usually sufficient for hide and color, although yellows and reds may require more. If you plan to polish or sand the colored dope, apply at least four coats. Wait at least one hour between coats; more is better. Never rush application; as a rule of thumb, two coats of dope a day is about right. Avoid spraying in cold or humid weather. If necessary, wet-sand between coats with 400-grit sandpaper. Insure all sanding residue is cleaned before additional coats are sprayed. To increase glossiness, use **Y-9910 Universal Retarder.** Mix one part **Y-9910 Retarder** with four parts **9703 Butyrate Thinner,** then thin the colored butyrate one to one with this mixture. Wait at least 24 hours before applying masking tape for trim colors; more is better. Dope can be polished out to a brilliant gloss with a variable speed automotive polisher equipped with a foam pad. Use polishing compound and follow with a quality carnauba based automotive paste wax.

**Dry Time:** 20 to 45 minutes, depending upon temperature and humidity. **Y-9910 Universal Retarder** will double normal drying times.

**Shelf Life:** Four years unopened. Insure that all residue is scraped off the bottom of cans in long storage, shake with a double-action paint sprayer.

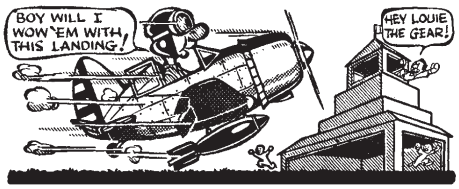


## RANTHANE POLYURETHANE

**Use: Ranthane** is a high-solids, flexible two-part polyurethane that is FAA approved for use on **Ceconite** fabric. Other polyurethanes are not approved on the **Ceconite** STC. Although extremely flexible, **Ranthane** is also optimized for use on primed aluminum, steel, or composite surfaces. **Ranthane** is offered in 50 colors as presented on Randolph Color Card 2004. **Ranthane** has three separately packaged components that are mixed before application. All three components are required and cannot be substituted: **Ranthane** polyurethane paint, **AU-2X1 Catalyst,** and **G-4200 Ranthane Thinner.**

**Packaging:** Gallons and quarts.

**Required components are as follows:**

**Gallon Components:**
- One gallon **Ranthane** polyurethane paint
- Two quarts **AU-2X1 Catalyst**
- One gallon **G-4200 Ranthane Thinner.**

These components will yield over two gallons of sprayable **Ranthane.**

**Quart Components:**
- One quart **Ranthane** polyurethane paint
- One pint **AU-2X1 Catalyst**
- One quart **G-4200 Ranthane Thinner.**

These components will yield over two quarts of sprayable **Ranthane.**

**Coverage:** One gallon of mixed components (two gallons sprayable) will yield 300 square feet with one coat. See specific aircraft amounts in the rear of this manual.

**Mixing:** Mix two parts **Ranthane** with one part **AU-2X1** and stir. Allow to sit for 20 minutes induction time before use.

**Pot Life:** Six hours, depending upon temperature and humidity.

**Thinning:** Thin 33% with **G-4200 Ranthane Thinner.** As a rule of thumb, this is about 3 parts catalyzed **Ranthane** to one part **G-4200 Ranthane Thinner.** For best results, thin 33%, then spray a vertical surface test area with a moderate coat to insure that the film has no orange peel and is not too runny.

**Application:**

**WARNING: AS WITH ALL CATALYZED POLYURETHANES, A FRESH-AIR SUPPLIED SPRAY MASK IS MANDATORY. CHARCOAL MASKS WILL NOT PROTECT FROM POLYISOCYNATES IN THE SPRAY MIST!**

**Ranthane** may be applied directly over fabric surfaces when the **Rand-0-Fill** silver butyrate has dried at least 36 hours. More drying time is better. **Epoxy primer** should dry for one week over metal or composite surfaces before applying **Ranthane.** Applying **Ranthane** directly over fresh sub-coats may result in bubbles in the **Ranthane** from trapped sub-coat solvents.

Before committing to spraying a whole component, spray a vertical test area. If orange peel results, add more **G-4200 Ranthane Thinner;** if the test area results in runs, spray less. Spray a light coat; allow this coat to dry for 10 minutes or until tacky. Follow with a full coat, wet enough for coverage and color, but not heavy enough to run. Wait 45 minutes between coats. Two coats should be sufficient for color and hide. If you wait more than seven days between coats, lightly scuff the surface with an ultra-fine Scotch-Brite pad.

**Dry Time:** 30 to 45 minutes, depending upon temperature and humidity. Wait at least 24 hours before turning components on sawhorses to avoid damaging the fresh paint. To speed up drying, use 1 ounce of **D-7201 Accelerator** per quart of catalyzed **Ranthane.**

**Shelf Life:** Four years unopened. Insure contents are fully mixed before use.

## AU-CAT-2X1 RANTHANE CATALYST

**Use: AU-CAT-2X1** is the only catalyst approved for **Ranthane.** Other products cannot be substituted. See mixing instructions in the **Ranthane** section above.

**Packaging:** Pints and quarts only.

**Shelf Life:** Two years unopened. Do not use if the catalyst becomes milky or stringy. Catalyst reacts with humidity; once opened, it may react in contact with any moisture.

## G-4200 THINNER FOR RANTHANE

**Use: G-4200 Thinner** is a special blend of solvents specifically formulated for use with **Ranthane** polyurethane paint. Other products cannot be substituted. See mixing instructions in the **Ranthane** section above.

**Packaging:** Quarts and gallons.

**Shelf Life:** Unlimited in closed containers.

## D-7201 RANTHANE ACCELERATOR

This product accelerates the drying time of **Ranthane.** Used to speed drying in cooler spraying temperatures (60s), or to accelerate drying time when airborne dirt contamination is a problem.

**PACKAGING:** Quarts.

**SHELF LIFE:** Four years unopened.

**MIXING:** Add **AU-CAT-2X1 Catalyst** to **Ranthane** before adding **D-7201 Accelerator.** Use up to 4 fl oz per catalyzed gallon (one fl oz per catalyzed quart). Finally, add **G-4200 Thinner** as instructed above.

## MARK II for METAL (NOT FOR USE ON FABRIC)

**Use: Mark II for Metal** is available in the same 50 colors as **Colored Butyrate Dope. Mark II** is used over primed metal or composite parts and is too brittle to be used over fabric.

**Mark II** is a tough, long-lasting topcoat paint. Although **Mark II** is a two-part catalyzed paint, it is not catalyzed with an isocyanate, thus normal safety equipment (a charcoal filtered spray mask) is sufficient. You do not have to use a supplied air respirator when spraying **Mark II.**

**Packaging: Mark II** comes in two-part kits: part one is a can of the colored paint; part two is a separate can with an equal volume of **Mixing Liquid. Mixing Liquid** contains the catalyst and thinner. Kits are packaged in quarts and gallons. A gallon kit consists of one gallon of paint and one gallon of **Mixing Liquid.** A quart kit consits of one quart of paint and one quart of **Mixing Liquid.**

**Coverage:** One mixed gallon kit (one gallon paint, one gallon **Mixing Liquid**) yields two gallons of sprayable paint. These two gallons will cover approximately 400 square feet with one coat.

**Mixing:** Combine one part of paint with one volume **Mixing Liquid.** Let stand for 20 minutes to allow the catalyst to work.

**Thinning:** For most conditions, try using it directly out of the can with no thinning. If orange peel results, thin 5 parts mixed paint to one part **Mark II Thinner.**

**Application:** Spray two or three coats one hour apart. Two coats may be sufficient. Allow overnight drying before moving parts. **Mark II** takes longer to dry than one-part paints. It may be slightly tacky for 24 hours.

**Shelf Life:** Four years in unopened storage.

### Mark II Mixing Liquid

**Use: Mixing Liquid** is a combination of catalyst and thinner to be used only with **Mark II for Metal** paint.

**Packaging:** Usually sold as a kit with **Mark II for Metal** paint. Packaged in gallons and quarts.

See directions for mixing, thinning and application above.

**Shelf Life:** Two years in unopened storage.

### Mark II Thinner

**Use:** Used to thin **Mark II for Metal** paint after it has been combined with **Mark II Mixing Liquid.**

**Application:** Thinning is generally unnecessary when **Mark II** is sprayed. However, if orange peel results, you may use **Mark II Thinner** to increase flow out.

**Mixing:** Combine one part **Mark II Thinner** with five parts mixed **Mark II** paint.

**Shelf Life:** Four years in unopened storage.

## FLATTENER

**Use: Flattener** is a liquid product with silica flattener added. It is used to reduce the gloss of **Butyrate Dope, Mark II,** and **Ranthane.** Adding **Flattener** in increasing amounts can result in semi-gloss or full military flat, depending upon the percentage added. Flattening is an inexact science; it is always best to spray a sample then let it dry to insure you are achieving the flatness desired.

**Packaging:** Quarts and pints.

**Shelf Life:** Four years unopened.

**Mixing: Flattener** must be stirred and shaken regularly to insure that all the silica is in suspension.

**Application: First** – get bigger containers for mixing. Since **Flattener** always increases the volume of the paint, if you plan on flattening a whole quart or gallon at one time, you will need empty cans or containers big enough to hold the flattened product. For example, if you are going to flatten a quart of **Ranthane,** you will need an empty gallon can with a lid if you plan to store it after flattening.

**Second:** Always do a test spray to insure you are getting the level of flatness you desire. Flatten a small amount, spray and let it dry. Do this before you commit to painting your airplane. Adjust the amount of **Flattener** if necessary; again, flattening is not an exact science. **Test first!**

**To flatten Butyrate Dope or Mark II to semi-gloss:** Mix four parts paint with one part **Flattener** (eight fluid ounces of **Flattener** per quart of paint). Thin normally.

**To flatten Butyrate Dope or Mark II to full flat:** Mix two parts paint with one part **Flattener** (sixteen fluid ounces of **Flattener** per quart of paint). Thin normally.

**To flatten Ranthane to semi-gloss:** Mix four parts paint with one part **Flattener.** (eight fluid ounces **Flattener** per quart of paint). Then catalyze this flattened mixture normally (2 parts flattened paint to one part catalyst). Then thin the catalyzed, flattened paint normally (3 parts catalyzed paint to one part **G-4200 Thinner).**

**NOTE: YOU'LL NEED EXTRA CATALYST.** Since the flattened paint yields more sprayable product, you will need some extra catalyst. In this case, each quart of semi-gloss flattened **Ranthane** will need an extra pint of catalyst; each gallon will need an extra quart. This is more than required, but will allow you to use all the flattened paint.

**To flatten Ranthane to full flat:** Mix two parts paint with one part **Flattener** (16 fluid ounces of **Flattener** per quart of paint). Then catalyze this flattened mixture normally (2 parts flattened paint to one part catalyst). Then thin the catalyzed, flattened paint normally (3 parts catalyzed paint to one part **G-4200 Thinner).**

**NOTE: YOU WILL NEED EXTRA CATALYST.** Since the flattened paint yields more sprayable product, you will need some extra catalyst. In this case, each quart of full-flat **Ranthane** will need an extra pint of catalyst, and each gallon of full-flat **Ranthane** will need an extra quart and a pint. This is more than required, but will allow you to use all the flattened paint with a little extra.

## FAST-DRY ENGINE ENAMELS

**Use: Engine Enamels** are formulated to use on engine crankcases and cylinders, usually after an engine overhaul or for general maintenance. They are heat resistant and provide good gloss and color retention.

**Packaging:** Quarts and gallons.

**Coverage:** One thinned gallon covers approximately 200 square feet with one coat.

**Shelf Life:** Guaranteed four years unopened. Avoid long-range storage above 100° F. Protect from freezing.

**Mixing:** Stir thoroughly with a paint paddle, and then shake on a double-action shaker for five minutes.

**Thinning:** Mix five parts **Engine Enamel** to one part **257 Enamel Thinner.**

**Application:** Apply to absolutely clean engine parts with a spray gun. **Engine Enamel** is a slow-drying paint that can remain tacky for long periods in high humidity. For best results, add 2 ounces of **E-9313 Enamel Hardener/Gloss Additive** per thinned quart of **Engine Enamel**. Spray two to three coats twenty minutes to an hour apart.

**CAUTION:** All coats should be sprayed on the same day, and then set aside to dry. Delays of more than a few hours between coats can result in wrinkling.

## E-9313 ENAMEL HARDENER/GLOSS ADDITIVE

**Use: E-9313** is a special drier additive that modifies **Engine Enamel** into a stronger film that dries faster and creates an even, glossier surface. Adding 2 fluid ounces per thinned quart improves the gloss and removes the tendency for **Engine Enamel** to remain slightly tacky for long periods. Do not add more than 2 fluid ounces; more than this amount can cause the **Engine Enamel** to curdle.

**Packaging:** One-pint containers.

**Shelf Life:** Two years unopened.

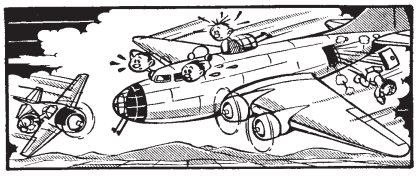

## 257 ENAMEL THINNER

**Use: Enamel Thinner** is a special formulation for **Engine Enamel** only. Mix one part thinner with five parts **Engine Enamel** for spray viscosity. If orange peel occurs, add more thinner.

**Packaging:** Quarts and gallons.

**Shelf Life:** Four years unopened.

## WING WALK COMPOUND

**Use: Wing Walk Compound** comes in two colors: black and gray. **Wing Walk** is a brush-on coating for wing walks or any areas where a gritty, non-skid walkway is desired. It is formulated to remain relatively soft throughout its service life to promote adhesion and prevent chipping.

**Packaging:** Gallons and quarts.

**Shelf Life:** Guaranteed two years from date of manufacture in sealed container in protected storage. Avoid long-range storage above 100° F. Protect from freezing.

**Coverage:** One unthinned gallon covers approximately 150 square feet with one coat.

**Mixing:** Stir thoroughly with a paint paddle before brushing. Insure that all the grit is in suspension and well mixed before application.

**Thinning:** Use directly out of the can. If the compound is too thick for the intended use, it may be thinned 5 parts of compound to 1 part toluene.

**Application:** May be applied over a variety of surfaces – epoxy-primed metal, wood, fabric on wood, or composites. Insure that the surface is clean and free from contaminates before application. If applying over old wing walk areas, remove loose or flaking old wing walk compound. Apply with a brush, mixing compound often to insure that the grit is suspended uniformly. Apply multiple coats until the desired non-skid surface is achieved. Apply all coats in one day, or wrinkling may occur.

**Caution: Wing Walk** will dry overnight, but will remain slightly tacky for days after application. It can be walked on with care after 24 hours, but for the first week after application, take care not to unnecessarily stress the new coating. In a few weeks, it will become a long-lasting non-skid coating that will provide excellent adhesion and long service life.

## 345 ACID-PROOF BATTERY BOX BLACK PAINT

**Use: Battery Box Black Paint** is an asphaltic coating used to provide protection from battery acid in battery boxes and compartments. It is generally applied with a brush or roller to any metal area that may be exposed to leaking battery acid.

**Packaging:** Quarts, gallons, 5-gallon pails, and 55-gallon drums.

**Shelf Life:** Guaranteed two years from date of manufacture in sealed container in protected storage.

**Coverage:** 225 square feet per gallon with one coat.

**Mixing:** Stir well before use.

**Thinning:** Use out of the can. If thinning is necessary, thin five parts paint to one part **286 Nitrate Thinner.**

**Application:** Apply with a brush. Three coats will provide the best possible protection to epoxy primed metal surfaces.

## 701 ALUMINUM PASTE

**Use: Aluminum Paste** is added to clear **butyrate dope** to make a UV-protective dope coating.

**Packaging:** One-pound can.

**Shelf Life:** Guaranteed two years from date of manufacture in sealed container in protected storage.

**Application:** Mix four ounces by weight to one gallon of **butyrate dope.** Mix thoroughly.

## FLOAT LACQUER

**Use: Float Lacquer** is a time-honored silver coating for aircraft floats. Although it can be applied by brush, it is more suitable for spraying. **Float Lacquer** is a classic, low-tech way of coating floats. Although its service life is far less than today's polyurethanes, its ease of application and repair make it a useful product. Apply over epoxy-primed metal or over old float lacquer.

**Packaging:** Quarts, gallons, 5-gallon pails, 55-gallon drums.

**Shelf Life:** One year in unopened containers.

**Coverage:** 225 square feet per gallon.

**Mixing:** Stir thoroughly before use. Insure all the silver is in suspension.

**Thinning:** Thin one to one with **286 Nitrate Thinner.**

**Application – Stripped or Bare Aluminum:** Use **Phosphoric Acid Etch** and conversion coating. Prime with **Epoxy Primer.** When dry, scuff with an ultra-fine Scotch-Brite pad. Clean well, then spray three coats of 1:1 thinned **Float Lacquer.**

**Application – Old Float Lacquer:** Clean well, scuff with an ultra-fine Scotch-Brite pad, and spray **Float Lacquer** as required for cosmetics. Can be brushed, although spraying results in a better coating.

## C-2210 PAINT SURFACE CLEANER

**Use:** A mild solvent cleaner used to clean surfaces before spray painting.

**Packaging:** One-quart and one-gallon cans.

**Shelf Life:** Unlimited in unopened cans.

**Application: Caution!** Insure parts are well grounded, particularly in the presence of high static electricity. If the weather is such that you are getting shocked on doorknobs, ground the part with a proper grounding cord; aggressive rubbing can cause enough static electricity to ignite fumes. Use sparingly on a barely damp clean rag or paper towel. Do not soak the rag; insure it is only slightly damp. Wipe gently over surfaces that are about to be painted or between coats if you suspect contamination on the surface. If a wet film results, you are using too much. Follow with a dry clean rag or paper towel. Wait at least two hours for all solvents to evaporate; again, use only sparingly as a cleaner. If you put it on wet and immediately spray, the wet **C-2210** can harm the film.

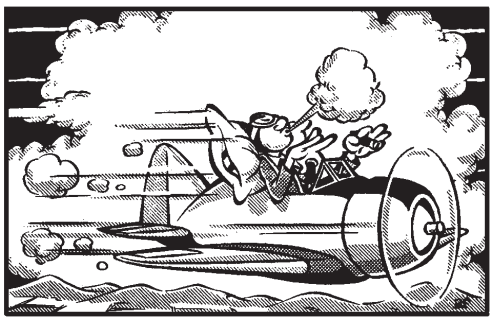

## Y-9910 UNIVERSAL RETARDER

**Use: Y-9910** is a mixture of slow-evaporating solvents that may be used with either **Butyrate** or **Nitrate Dope.** It has two major purposes: To help prevent blush when spraying any dope product in humid conditions and to slow down drying to enhance dope leveling and gloss in final color coats.

**Packaging:** Quarts, Gallons, 5-Gallon Pails, 55-Gallon Drums.

**Mixing:**
**Nitrate Dope:** Add one part **Y-9910 Retarder** to three parts **286 Nitrate Thinner.**
**Butyrate Dope:** Add one part **Y-9910 Retarder** to three parts **9703 Butyrate Thinner.**

**Thinning:** Use the mixed thinners recommended above to thin the appropriate product one-to-one.

**Application:**
**To prevent blush:** Spray a small test area of thinned dope; let it dry and examine the dried dope. Blushed dope will exhibit a slightly milky appearance. If there is no evidence of blush, continue. If blush occurs, stop spraying and wait for less humidity. Blushed dope will eventually fail or peel.
**To increase glossiness in final Butyrate Dope color coats:** Mix and thin as above; spray the final one or two coats. This dope will dry more slowly which should increase gloss.

**Shelf Life:** Two years unopened.

## J-3000 BUTYSOLV REJUVENATOR

**Use: Rejuvenator** adds fresh plasticizers to old, brittle dope coatings. It restores flexibility and suppleness in dope finishes that are cracking, ringworming, or losing adhesion. It softens and slightly flows old coatings to allow hairline cracks to close and fill. It does not restore color or gloss to faded **Colored Dope,** nor does it fill big cracks or voids.
**NOTE: Rejuvenator** only works if **Colored Butyrate Dope** is used as the topcoat; it will not penetrate polyurethane paint of any type.

**Packaging:** Quarts, Gallons, 5-Gallon Pails, 55-Gallon Drums.

**Mixing:** Mix two parts **J-3000 Butysolv Rejuvenator** to three parts **9703 Butyrate Thinner.**

**Application:** Disassemble the aircraft, if possible. It's much easier to spray parts on sawhorses than upside down under the wings. Wash the fabric thoroughly as you would your car to remove dirt, grease and grime. Wet-sand the surface with 280-grit sandpaper; flush all residue; dry with clean rags. Mix two parts **J-3000 Butysolv Rejuvenator** to three parts **9703 Butyrate Thinner.** Spray one full, wet cross-coat (two passes of the gun at right angles). Wait 30 minutes until the coatings become soft, then you may be able to use your fingers to smooth out hairline cracks and small ringworms. (Be sure to protect your hands.) Wait two hours and spray on another cross-coat of thinned **Rejuvenator.** Let dry at least overnight. Fill any remaining small cracks with **Rand-O-Fill Silver Butyrate** using a small brush. If necessary, spray two coats of **Rand-O-Fill** to give a good sanding and filling base. Sand as required and repaint with **Colored Butyrate Dope.**

**Dry Time:** Although **J-3000 Butysolv** will dry overnight, it is best to wait at least three days before repainting to insure the powerful solvents in **J-3000** do not damage the new paint.

**Shelf Life:** Two years unopened.

**MANUFACTURING DATE CODES**
The manufacturing dates of all liquid products are indicated on the labels. The first two digits are the year, the third and fourth digits the month, and the last three digits the production batch number for that month.

**PRODUCT WARRANTY and LIABILITY**
Warranty limited to the replacement of materials only. Since we have no control over the application of our products, we disclaim any guarantee of performance.

United States Of America

Department of Transportation - Federal Aviation Administration

# Supplemental Type Certificate

## *Number* SA4503NM

*This Certificate issued to* Ceconite Division of Poly-Fiber, Inc.
4343 Fort Drive
Riverside, California 92509-3129

or (mailing address)
P.O. Box 3129
Riverside, California 92519

*certifies that the change in the type design for the following product with the limitations and conditions therefor as specified hereon meets the airworthiness requirements of Part * of the * Regulations.*

*Original Product Type Certificate Number :* *

*Make :* *

*Model :* *

* See attached FAA Approved Model List (AML) No. SA4503NM for list of approved aircraft models and applicable airworthiness regulations

*Description of Type Design Change:* Remove original cloth covering and install Ceconite covering material in accordance with Procedure Manual 101 for the Ceconite Aircraft Covering Process, dated August 1997, or later FAA approved revision.

*Limitations and Conditions:* The approval for this modification applies to the aircraft models on the attached FAA Approved Model List No. SA4503NM only. This installation should not be incorporated in any aircraft unless it is determined that the interrelationship between this installation and any previously approved configuration will not introduce any adverse effect upon the airworthiness of the aircraft. This modification was determined not to increase the noise level and was not considered an "acoustic change" as defined in section 21.93(b), Amendment 21-71 of the Federal Aviation Regulations.

*This certificate and the supporting data which is the basis for approval shall remain in effect until surrendered, suspended, revoked or a termination date is otherwise established by the Administrator*

*Date of application :* June 6, 1988

*Date of issuance :* January 3, 2000
*of the Federal Aviation Administration.*

*Date reissued :* November 13, 1997, May 27, 2003

*Date amended :*

*By direction of the Administrator*

(Signature)

Manager, Airframe Branch
Los Angeles Aircraft Certification Office

(Title)

*Any alteration of this certificate is punishable by a fine of not exceeding $1,000, or imprisonment not exceeding 3 years, or both.*

FAA Form 8110-2(10-68) Page 1 of 2 *This certificate may be transferred in accordance with FAR 21.47.*

# FEDERAL AVIATION ADMINISTRATION - PARTS MANUFACTURER APPROVAL

**Ceconite**
**4343 Fort Drive**
**P.O Box 3129**
**Riverside, CA 92519-3129**

**PMA NO. PQ0318NM**
**SUPPLEMENT NO. 1**
**DATE: January 7, 1997**
**AMENDED: April 28, 2003**

| PART NAME | PART NUMBER | APPROVED REPLACEMENT FOR PART NUMBER | APPROVAL BASIS AND APPROVED DESIGN DATA | MAKE ELEGIBILITY | MODEL ELEGIBILITY |
|---|---|---|---|---|---|
| Ceconite Aircraft Covering Process | As listed in Ceconite Procedures Manual 101 dtd: 8/97 | Modification Part | STC SA4503NM<br>Dwg: Ceconite Procedure Manual 101<br>Rev: None<br>Dtd: August 1997<br>or later FAA approved revision(s) | Per Approved Model List (AML): SA4503NM | Per Approved Model List (AML): SA4503NM |

----------End of Listing----------

**Note: Minor design changes (reference 14 CFR part 21 §§ 21.93 and 21.95) must be submitted in a manner as determined by the ACO. Major design changes (reference 14 CFR part 21 §§ 21.93 and 21.97) to drawings and specifications are to be handled in the same manner as that for an original FAA-PMA.**

**Christopher B. Bergen**
**Manager, Los Angeles Manufacturing**
**Inspection District Office**

If an aircraft is not listed on the Ceconite Approved Model List (AML), it may be added as follows:

1. The mechanic who did the work should complete this form and sign it.
2. Send the form to Ceconite Division of Poly-Fiber, P. O. Box 3129, Riverside, CA 92519.
3. Ceconite will acknowledge receipt back to you and submit the Installation Report for your aircraft to the FAA Los Angeles Aircraft Certification Office/ANM-120L, 3960 Paramount Blvd., Lakewood, CA 90712-4137 (phone 562-627-5232). Your aircraft will be added to the published Approved Model List when the Ceconite Procedure Manual is revised and reprinted.

---

## CECONITE INSTALLATION REPORT

I certify that fabric-covered surfaces of the following aircraft have been recovered in accordance with STC SA4503NM Procedure Manual 101 for the Ceconite Aircraft Covering Process.

Aircraft Make: _____

Aircraft Model: _____

Aircraft Type Certificate Number: _____

Date of Installation Completion: _____

Components Recovered: _____

_____

Date of Ceconite Procedure Manual 101: _____

Signed: _____
(Signature & Date)

_____
(Printed Name)

_____
(Address)

_____
(Phone)

_____
(Email Address)

# FAA Approved Model List (AML) No. SA4503NM

## The Ceconite STC
## for
## Installing Fabric Covering

**Issue Date: June 6, 1988**

**Note: Entries shown in bold are either new or were revised since the previous Approved Model List, dated January 2003.**

| Item No. | Aircraft Make | Model | Original Type Certificate | Components | AML Amend. |
|---|---|---|---|---|---|
| 1 | Aeronca | C-2 Standard, C-2 Scout, PC-2 | ATC 351 | All fabric covered components | |
| 2 | Aeronca (American Champion / Bellanca / Trytek) | C-3, PC-3 | A-396 | All fabric covered components | |
| 3 | Aeronca (American Champion / Bellanca / Trytek / Gores) | K, KS | A-634 | All fabric covered components | 1/1/2003 |
| 4 | Aeronca | LC, LCS | ATC 614 | All fabric covered components | 1/1/2003 |
| 5 | Aeronca (American Champion / Bellanca / Trytek) | O-58A (Army L-3A), O-58B (Army L-3B, L-3C), SO-58B | A-751 | All fabric covered components | 1/1/2003 |
| 6 | Aeronca (Gores) | 50-C, 65-C, 65-CA (Army L-3F), S-50-C, S-65-C, S-65-CA, KCA | A-675 | All fabric covered components | 1/1/2003 |
| 7 | Aeronca (Trytek/Gores) | 50-L, 50-LA, 65-LA, 65-LB (Army L-3G) | A-702 | All fabric covered components | |
| 8 | Aeronca (American Champion / Bellanca / Trytek) | 50-TC, 60-TF, 65-TC (Army L-3J), 65-TF, 50-TL, 65-TL, 65-TAC (Army L-3E), 65-TAF (Army L-3D), 65-TAL, YO-58 (Army L-3) | A-728 | All fabric covered components | 1/1/2003 |
| 9 | Aeronca (Bellanca / American Champion) | Champion 7AC, 7ACA, S7AC, 7BCM (Army L-16A), 7CCM (Army L-16B), S7CCM, 7DC, S7DC, 7EC, S7EC, 7ECA, 7FC, 7GC, 7GCA, 7GCAA, 7GCB, 7GCBA, 7GCBC, 7HC, 7JC, 7KC, 7KCAB | A-759 | All fabric covered components | 1/1/2003 |
| 10 | American Champion (Bellanca) | 8KCAB, 8GCBC | A21CE | All fabric covered components | 1/1/2003 |
| 11 | Aeronca (American Champion / Bellanca / Trytek) | Chief 11AC, S11AC, 11BC, S11BC | A-761 | All fabric covered components | |
| 12 | American Champion (Aeronca / Bellanca / Trytek) | Super Chief 11CC, S11CC | A-796 | All fabric covered components | |
| 13 | Aeronca (Rogers / Mitchell) | Sedan 15AC, S15AC | A-802 | All fabric covered components | |

# FAA Approved Model List (AML) No. SA4503NM

| Item No. | Aircraft Make | Model | Original Type Certificate | Components | AML Amend. |
|---|---|---|---|---|---|
| **14** | **Aerotechnik s.r.o.** | **L13 SEH VIVAT Glider** | **G72EU** | **All fabric covered components** | **6/1/2008** |
| 15 | Aetna Aerocraft | 2SA | TC 733 | All fabric covered components | 1/1/2003 |
| 16 | Air Tractor, Inc. | AT300, AT301, AT302, AT400, AT400A | A9SW | All fabric covered components | 1/1/2003 |
| 17 | American (Roos) | American Eagle A-1 or 101 | ATC 17 | All fabric covered components | |
| 18 | American (Roos) | Eaglet B-31 | ATC-450 | All fabric covered components | 1/1/2003 |
| **19** | **American Airplane & Engine Corp.** | **Pilgrim 100B** | **ATC 470** | **All fabric covered components** | **6/1/2008** |
| **20** | **American Blimp Corp.** | **A-1-50** | **S00002SE** | **All fabric covered components** | **6/1/2008** |
| 21 | Arrow Aircraft & Motors Corp. | Arrow Sport | ATC 115 / TC 2-110 | All fabric covered components | |
| 22 | Aviat (Sky / Christen / White) | A-1 | A22NM | All fabric covered components | 1/1/2003 |
| 23 | Ayres (Rockwell Commander) | Snow S-2B, S-2C, 600-S-2C | 2A7 | All fabric covered components | |
| 24 | Ayres (Rockwell) | Thrush 600 S-2D, S-2R | A3SW | All fabric covered components | 1/1/2003 |
| 25 | Ayres (Rockwell) | Commander 600 S2D, 600 S2R | A4SW | All fabric covered components | 1/1/2003 |
| 26 | Beech | C18S (Army C-45, -45A, UC-45B, -45F, AT-7, -7A, -7B, -7C; Navy JRB-1, -2, -3, -4, SNB-2, -2C, -3) | A-757 | All fabric covered components | 1/1/2003 |
| 27 | Beech | D17S (Army UC-43, -43B; Navy GB-1, -2), SD17S | A-649 | All fabric covered components | |
| 28 | Beech | D17A (Army UC-43F) | TC 713 | All fabric covered components | |
| 29 | Beech | D17R (Army UC-43A) | TC 638 | All fabric covered components | |
| 30 | Beech | D18C, D18S, E18S, E18S-9700, G18S, H18, C-45G, TC-45G, C-45H, TC-45H, TC-45J (SNB-5), JRB-6 | A-765 | All fabric covered components | |
| 31 | Beech | E17B (Army UC-43D) | TC 641 | All fabric covered components | |
| 32 | Beech | F17D (Army UC-43C) | TC 689 | All fabric covered components | |
| 33 | Beech | Army AT-11, Navy SNB-1 | A-2-582 | All fabric covered components | |
| 34 | Bell Helicopter | 47D1 | H-1 | All fabric covered components | |

# FAA Approved Model List (AML) No. SA4503NM

| Item No. | Aircraft Make | Model | Original Type Certificate | Components | AML Amend. |
|---|---|---|---|---|---|
| **35** | **Bellanca (Aeronca / American Champion)** | **14-9** | **TC 716** | **All fabric covered components** | **6/1/2008** |
| 36 | Bellanca (Aeronca / American Champion) | 14-12F-3 | TC 745 | All fabric covered components | |
| 37 | Bellanca (Aeronca / American Champion) | 14-13, 14-13-2, -3, -3W | A-773 | All fabric covered components | |
| 38 | Bellanca | Cruisemaster 14-19, -19-2, -3, -3A, 17-30, 17-31, 17-31TC | 1A3 | All fabric covered components | 1/1/2003 |
| 39 | Bellanca | 17-30A, 17-31A, 17-31ATC | A18CE | All fabric covered components | 1/1/2003 |
| 40 | Bellanca | Eagle DW-1 | A4NW | All fabric covered components | 1/1/2003 |
| 41 | Bellanca (Aeronca / American Champion) | CH-300 Pacemaker | ATC 129 | All fabric covered components | |
| 42 | Blanik (LET Aeronautical Works) | L-13 Glider | G24EU | All fabric covered components | |
| 43 | Blanik (LET Aeronautical Works) | L-23 Super-Blanik Glider | G60EU | All fabric covered components | 1/1/2003 |
| 44 | Boeing | Army B-17F, B-17G | LTC-1 | All fabric covered components | |
| 45 | Boeing | 377 | A-812 | All fabric covered components | |
| 46 | Brunner-Winkle (Perth-Amboy) | Bird BK | ATC 239 | All fabric covered components | |
| 47 | Brunner-Winkle (Bird / Perth-Amboy) | Bird BW | ATC 382 | All fabric covered components | 1/1/2003 |
| 48 | Brunner-Winkle (Bird / Perth-Amboy) | Bird CK | ATC 388 | All fabric covered components | 1/1/2003 |
| 49 | Buhl | Flying Bull Pup LA-1 | ATC 405 | All fabric covered components | |
| 50 | Callair (Intermountain / Aero Commander) | A, A-2, A-3, A-4, A-5, A-5T, A-6, A-7, A-7T, A-9, A-9B | A-758 | All fabric covered components | 1/1/2003 |
| 51 | Callair (Intermountain / Aero Commander) | B-1A | A8WE | All fabric covered components | 1/1/2003 |
| 52 | Cessna | 120, 140 | A-768 | All fabric covered components | |
| 53 | Cessna | C-145, C-165 (Army UC-94) | A-701 | All fabric covered components | |
| 54 | Cessna | 170 | A-799 | All fabric covered components | |
| 55 | Cessna | T-50 (Army AT-17 & UC-78 Series, Navy JRC-1) | A-722 | All fabric covered components | |

# FAA Approved Model List (AML) No. SA4503NM

| Item No. | Aircraft Make | Model | Original Type Certificate | Components | AML Amend. |
|---|---|---|---|---|---|
| 56 | Chase (Roberts) | YC-122C | AR-25 | All fabric covered components | |
| 57 | Command-Aire | 3-C-3 Trainer | ATC 150 | All fabric covered components | |
| 58 | Commonwealth (see Rearwin) | | | | |
| 59 | Consolidated-Vultee (General Dynamics) | PBY-5 (Army OA-10), PBY-5A (Army OA-10A) | TC 2-548 | All fabric covered components | |
| 60 | Consolidated-Vultee (General Dynamics) | PBY-6A (Convair) | TC AR-22 | All fabric covered components | |
| 61 | Convair (Consolidated-Vultee / General Dynamics) | Army L-13A | TC AR-10 | All fabric covered components | |
| 63 | Consolidated-Vultee (General Dynamics) | BT-13, -13A (Navy SNV-1), -13B (Navy SNV-2), -15 | A-2-571 | All fabric covered components | |
| 63 | Consolidated-Vultee (General Dynamics) | P4Y-2 (Convair Privateer) | TC AR-29 | All fabric covered components | |
| 64 | Consolidated-Vultee (General Dynamics) | 28-5ACF Catalina | TC 785 | All fabric covered components | |
| **65** | **Culver (Superior)** | **Cadet LFA** | **A-730** | **All fabric covered components** | **6/1/2008** |
| 66 | Culver (Superior) | V, V2 | A-778 | All fabric covered components | 1/1/2003 |
| 67 | Culver (Superior) | Army PQ-14A, -14B, YPC-14A, -14B; Navy TD2C-1 | LTC-28 | All fabric covered components | 1/1/2003 |
| 68 | Curtiss-Wright (Reed) | P-40L, P-40N | TCS LTC-18 | All fabric covered components | 1/1/2003 |
| 69 | Curtiss-Wright | C-46A, C-46D | A-772, A-789, 3A2 | All fabric covered components | 1/1/2003 |
| 70 | Curtiss-Wright | C-46E | A-772, A-786 | All fabric covered components | 1/1/2003 |
| 71 | Curtiss-Wright | C-46R | 3A2 | All fabric covered components | 1/1/2003 |
| **72** | **Curtiss-Wright** | **Robin C-2** | **ATC 144** | **All fabric covered components** | **6/1/2008** |
| 73 | Curtiss-Wright | Robin J-1, J-1 Deluxe | ATC 220 | All fabric covered components | |
| 74 | Curtiss-Wright | CW-1 | ATC-397 | All fabric covered components | 1/1/2003 |
| 75 | Dart | G | TC 674 | All fabric covered components | |
| 76 | Davis | D-1-K | ATC 272 | All fabric covered components | 1/1/2003 |
| 77 | Davis | D-1-W | TC 2-394 | All fabric covered components | |
| 78 | de Havilland (Cliff Robertson) | DH 82A Tiger Moth | A8EU | All fabric covered components | |

# FAA Approved Model List (AML) No. SA4503NM

| Item No. | Aircraft Make | Model | Original Type Certificate | Components | AML Amend. |
|---|---|---|---|---|---|
| 79 | de Havilland | 104 Dove Series 1A, 2A, 5A, 5BA, 6A, 6BA, 7A, 7AXC, 8A, 8AXC | A-807 | All fabric covered components | 1/1/2003 |
| 80 | de Havilland | DHC-1B-2 Chipmunk | A26NM | All fabric covered components | 1/1/2003 |
| 81 | de Havilland (Rust) | DHC1 Chipmunk 22A | A44EU | All fabric covered components | |
| 82 | Dornier-Werke | Do 28 A-1 | 7A13 | All fabric covered components | 1/1/2003 |
| 83 | McDonnell Douglas | DC-3-G102, DC3-G102A (Army C-49E, -50, -50A, -50B, -50C, -50D, -51), DC3-G103A, DC3-G202A (Army C-49, -49A, -49B, -49C, -49D, -49J, -49K, Navy R4D-2) | A-618 | All fabric covered components | 1/1/2003 |
| 84 | McDonnell Douglas | DC3A-SCG,-SC3G,-S1CG,-S1C3G (Army C-41, C-41A, C-48,-48A,-52,-52A,-52B,-52C,-53, -53B,-53C,-53D,-68; Navy R4D-3,-4); DC3A-S4C4G; DC3C-SC3G,-S1C3G,-S4C4G (Army C-47,-47A; Navy R4D-1,-5); DC3C-R-1830-90C (Army C-47B; Navy R4D-6); DC3D-R-1830-90C (Army C-117A) | A-669 | All fabric covered components | |
| 85 | Douglas | R4D-8 | 6A2 | All fabric covered components | |
| 86 | Douglas (Seaboard) | Army A-24B, Navy SBD-5 | L-4 | All fabric covered components | |
| 87 | Douglas | A-26B (Army), A-26C (Army) | TCS L-3 | All fabric covered components | |
| 88 | McDonnell Douglas | C-54-DC (Army C-54, Navy R5D); C54A-DC (Army C-54A, Navy R5D-1); C54B-DC (Army C-54B, Navy R5D-2); C54D-DC (Army C-54-D, Navy R5D-3); C54E-DC (Army C-54E, Navy R5D-4); C54G-DC (Army C-54G, Navy R5D-5), DC-4 | A-762 | All fabric covered components | |
| 89 | McDonnell Douglas | DC-6 (YC-112A) | A-781 | All fabric covered components | |
| 90 | McDonnell Douglas | DC-6A (Navy R6D-1, USAF C-118A) | 6A3 | All fabric covered components | |
| 91 | McDonnell Douglas | DC-6B (Navy R6D-1Z) | 6A4 | All fabric covered components | |
| 92 | McDonnell Douglas | DC7B | 4A10 | All fabric covered components | |
| **93** | **Duramold Aircraft Corp.** | **F-46A** | **TC 2-545** | **All fabric covered components** | **6/1/2008** |
| 94 | Emair (Murryair) | MA-1, MA-1B | A6PC | All fabric covered components | 1/1/2003 |
| 95 | Ercoupe | 415-C, -CD | A-718 | All fabric covered components | |
| 96 | Ercoupe | 415-D, -E, -G | A-787 | All fabric covered components | |
| 97 | Extra Flugseagbau | EA-300/200 | A67EU | All fabric covered components | 1/1/2003 |

# FAA Approved Model List (AML) No. SA4503NM

| Item No. | Aircraft Make | Model | Original Type Certificate | Components | AML Amend. |
|---|---|---|---|---|---|
| 98 | Fairchild | KR-21 | ATC 215 | All fabric covered components | |
| 99 | Fairchild | KR-31 | ATC 19 | All fabric covered components | |
| 100 | Fairchild Hiller | M-62A (Army PT-19, -19A, -19A-AE, -19A-SL, -19B, -19B-AE); M-62A-3 or -4 (Army PT-26, -26A, -26B); M-62B, -62C (Army PT-23, -23-AE, -23-HO, -23-SL, -23A, -23A-SL) | A-724 | All fabric covered components | |
| 101 | Fairchild | 22 C7G | ATC 564 | All fabric covered components | |
| 102 | Fairchild | 24 C8 | ATC 475 | All fabric covered components | 1/1/2003 |
| 103 | Fairchild | 24 C8C, C8CS | A-535 | All fabric covered components | 1/1/2003 |
| 104 | Fairchild | 24 C8E and 24 C8ES | ATC 600 | All fabric covered components | 1/1/2003 |
| 105 | Fairchild | 24G (Army UC-61H) | ATC 633 | All fabric covered components | |
| 106 | Fairchild | 24H | ATC 632 | All fabric covered components | 1/1/2003 |
| 107 | Fairchild | 24J (Army UC-61B), 24JS | TC 663 | All fabric covered components | |
| 108 | Fairchild | 24R9 (Army UC-61C), 24R9S, 24R40 (Army UC-86), 24R40S, 24R46, 24R46A (Army UC-61K), 24R46S | A-706 | All fabric covered components | 1/1/2003 |
| 109 | Fairchild (Steward) | C-82A Jet Packet | AR-15 | All fabric covered components | |
| 110 | Fairchild | F-45 (Army UC-80) | TC 603 | All fabric covered components | |
| 111 | Fleet (Brewster) | Fleet 1 | ATC 122 | All fabric covered components | |
| 112 | Fleet (Brewster) | Fleet 2 | ATC 131 | All fabric covered components | |
| 113 | Fleet (Brewster) | Fleet 7, 7-C, 7 Deluxe, 10 | ATC 374 | All fabric covered components | |
| 114 | Fleet (Brewster) | Fleet (Phillips) 7 | TC 2-562 | All fabric covered components | |
| 115 | Fleet (Brewster) | Fleet 8, 9 | ATC 428 | All fabric covered components | |
| 116 | Fleet (Brewster) | 16B (RCAF Finch II) | TC 2-566 | All fabric covered components | |
| 117 | Fleet (Brewster) | Fleet 80 | TC 788 | All fabric covered components | |
| 118 | Fleetwings (Kaiser) | F-401 | TC 2-540 | All fabric covered components | 1/1/2003 |
| 119 | Frankfort (Corcoran) | B Glider (Army XTG-1, -TG-1A, -1C) | GTC 7 | All fabric covered components | 1/1/2003 |
| 120 | Franklin | Model A (S/N #8) | ATC 2-246 | All fabric covered components | 1/1/2003 |
| 121 | Funk (McClish) | B, B75L (Army UC-92), B85C | A-715 | All fabric covered components | |
| 122 | Great Lakes Aircraft | 2T-1 | ATC 167 | All fabric covered components | |

# FAA Approved Model List (AML) No. SA4503NM

| Item No. | Aircraft Make | Model | Original Type Certificate | Components | AML Amend. |
|---|---|---|---|---|---|
| 123 | Great Lakes Aircraft (Chapparal) | 2T-1A, 2T-1A-1, 2T-1A-2 | ATC 228 / A18EA | All fabric covered components | 1/1/2003 |
| 124 | Great Lakes Aircraft | 2T-1E | ATC 354 | All fabric covered components | |
| 125 | Grumman | F7F-3 (Navy Tigercat) | AR-28 | All fabric covered components | |
| 126 | Grumman | F8F-1 (Navy Bearcat) | LTC-23 | All fabric covered components | 1/1/2003 |
| 127 | Grumman | F8F-2 (Navy Bearcat) | AR-32 | All fabric covered components | |
| 128 | Grumman | FM-2 (Navy Wildcat) | LTC-25 | All fabric covered components | |
| 129 | Grumman | G21, -21A (Army OA-9, Navy JRF-1, -2, -3, -4, -5, -6B) (Goose) | TC 654 | All fabric covered components | |
| 130 | Grumman (Gulfstream) | G-44 (Army OA-14, Navy J4F-2), -44A, SCAN Type 30 (Widgeon) | A-734 | All fabric covered components | |
| 131 | Grumman (Gulfstream) | G-73 (Mallard) | A-783 | All fabric covered components | |
| 132 | Grumman (Allied Ag Cat) | G-164, G-164A, G-164B | 1A16 | All fabric covered components | 1/1/2003 |
| 133 | Grumman | Navy TBF & TBM Series (Avenger) | LTC-8 | All fabric covered components | |
| 134 | Grumman | Navy J2F-3, J2F-4, J2F-5, J2F-6 (Duck) | LTC-17 | All fabric covered components | |
| 135 | Grumman | HU-16A, HU-16B (Albatross) | A33SO | All fabric covered components | 1/1/2003 |
| 136 | Harlow (Peacock) | PJC-1, -2 (Army UC-80) | TC 659 | All fabric covered components | 1/1/2003 |
| 137 | Helio | H-250, H-295 (USAF U-10D), H-391 (USAF YL-24), H-391B, H-395 (USAF L-28A), H-395A | 1A8 | All fabric covered components | 1/1/2003 |
| 138 | Helton (Spinks) | Lark 95 | A-748 | All fabric covered components | 1/1/2003 |
| 139 | Hiller Aviation | UH-12B, UH-12C | 6H2 | All fabric covered components | |
| **140** | **Hiller Aviation** | **UH-12D** | **4H10** | **All fabric covered components** | **6/1/2008** |
| 141 | Howard (Jobmaster) | DGA-11 | TC 672 | All fabric covered components | |
| 142 | Howard (Jobmaster) | DGA-15J (Army UC-70B), DGA-15P (Army UC-70, Navy GH-1, -2, -3, NH-1), DGA-15W | A-717 | All fabric covered components | |
| 143 | Inland | W-500 | ATC 315 | All fabric covered components | 1/1/2003 |
| 144 | Interstate (Callair) | S-1A, S-1A-65F, -85F, -90F | A-737 | All fabric covered components | |
| 145 | Interstate (Callair) | S-1B1 (Army L-6, XL-6) | A-754 | All fabric covered components | |

# FAA Approved Model List (AML) No. SA4503NM

| Item No. | Aircraft Make | Model | Original Type Certificate | Components | AML Amend. |
|---|---|---|---|---|---|
| 146 | Intreprinderea De Constructii Aeronautice Brasov | IS-28B2 Glider | G40EU | All fabric covered components | |
| **147** | **Johnson (Pirtle)** | **Johnson Rocket 185** | **TC 776** | **All fabric covered components** | **6/1/2008** |
| 148 | Kinner Motors, Inc. | Sportster K | ATC 490 | All fabric covered components | 1/1/2003 |
| 149 | Laister-Kauffmann | LK-10A (Army TG-4A), LK-10B | G-15 | All fabric covered components | 1/1/2003 |
| **150** | **LET Aeronautical Works** | **L33 SOLO Glider** | **G71EU** | **All fabric covered components** | **6/1/2008** |
| 151 | Lockheed | 1649A-98 | 4A17 | All fabric covered components | |
| 152 | Luscombe | 8, 8A, 8B, 8C, 8D, 8E, 8F, T-8F | A-694 | All fabric covered components | |
| 153 | Luscombe | Phantom 1 | TC 552 | All fabric covered components | |
| 154 | Martin-Marietta | 202, 202A | A-795 | All fabric covered components | |
| 155 | Martin-Marietta | 404 | 1A7 | All fabric covered components | |
| 156 | Maule | Bee Dee M-4, M-4, -4C, -4S, -4T; M-4-180C, S, T; M-4-210, C, S, T; M-4-220, C, S, T; M-5-180C, -200, -210C, -210TC, -220C, -235C; M-6-180, -235; M-7-235; MX-7-235, -180 | 3A23 | All fabric covered components | 1/1/2003 |
| 157 | McKinnon | G-21G | 4A24 | All fabric covered components | |
| 158 | Meyers | OTW, -KR, -145, -160 | A-736 | All fabric covered components | 1/1/2003 |
| 159 | Monocoupe | 90, 90A, 90AF, 90AF-100, 90AL-115 | A-306 | All fabric covered components | |
| 160 | Monocoupe | 110 | TC-327 | All fabric covered components | 1/1/2003 |
| 161 | Mooney | M20, M20A, M20B, M20C, M20D, M20E, M20F, M20G | 2A3 | All fabric covered components | 1/1/2003 |
| 162 | Mooney Mite | M-18C, -18C55, -18L, -18LA | A-803 | All fabric covered components | 1/1/2003 |
| 163 | Moth/Hawker | 60GM, 60GMW | ATC 197 | All fabric covered components | 1/1/2003 |
| 164 | Naval Aircraft Factory | Navy N3N-3 | A-2-569 | All fabric covered components | |
| 165 | Nord-Aviation (Aerospatiale) | Nord 262 A-12 | A6EU | All fabric covered components | |
| 166 | Noorduyn | Army UC-64, Norseman Mark VI, UC-64A, UC-64B, UC-64AS | A-2-578 | All fabric covered components | 1/1/2003 |
| 167 | North American | BC-1A, AT-6 (SNJ-2), -6A (SNJ-3), -6B, -6C (SNJ-4), -6D (SNJ-5), -6F (SNJ-6, -7), T-6G | A-2-575 | All fabric covered components | |

# FAA Approved Model List (AML) No. SA4503NM

| Item No. | Aircraft Make | Model | Original Type Certificate | Components | AML Amend. |
|---|---|---|---|---|---|
| 168 | North American (Shell) | Army RB-25; B-25C, G, H, J; B-25N; TB-25N | LTC-2 | All fabric covered components | 1/1/2003 |
| 169 | North American (Cavalier) | Army P-51C, D, K | LTC-11 | All fabric covered components | |
| 170 | Nelson | BB-1 Glider | GTC 19 | All fabric covered components | 1/1/2003 |
| 171 | Pasped | Skylark W-1 | TC 2-546 | All fabric covered components | 1/1/2003 |
| **172** | **Pheasant Aircraft Corp.** | **Pheasant H-10** | **ATC 36** | **All fabric covered components** | **6/1/2008** |
| 173 | Piaggio | P.136-L, -L1, -L2 | A-813 | All fabric covered components | 1/1/2003 |
| 174 | Piper | Cub E-2 | ATC 455 | All fabric covered components | 1/1/2003 |
| 175 | Piper | J-2 | ATC 595 | All fabric covered components | 1/1/2003 |
| 176 | Piper | J3C-40, -50, -50S, -65 (Army L-4, L-4A, L-4B (Navy NE-1), L-4H, L-4J (Navy NE-2)), -65S, PA-11, PA-11S | A-691 | All fabric covered components | |
| 177 | Piper | J3F-50, -50S, -60, -60S, -65 (Army L-4D), -65S | A-692 | All fabric covered components | |
| 178 | Piper | J3L, -S, -65 (Army L-4C), -65S | A-698 | All fabric covered components | |
| 179 | Piper | J4, J4A, J4A-S | A-703 | All fabric covered components | |
| 180 | Piper | J4B | TC 708 | All fabric covered components | |
| 181 | Piper | J4E (Army L-4E) | A-740 | All fabric covered components | |
| 182 | Piper | J4F | TC 721 | All fabric covered components | |
| 183 | Piper | J5A (Army L-4F), J5A-80, J5B (Army L-4G), J5C, AE-1, HE-1 | A-725 | All fabric covered components | |
| 184 | Piper | PA-12, PA-12S | A-780 | All fabric covered components | |
| 185 | Piper | PA-14 | A-797 | All fabric covered components | |
| 186 | Piper | PA-15 | A-800 | All fabric covered components | |
| 187 | Piper | PA-16, PA-16S | 1A1 | All fabric covered components | |
| 188 | Piper | PA-17 | A-805 | All fabric covered components | |
| 189 | Piper | PA-18, PA-18S, PA-18 "105" (Special), PA-18S "105" (Special), PA-18A, PA-18 "125" (Army L-21A), PA-18S "125", PA-18AS "125", PA-18 "135" (Army L-21B), PA-18A "135", PA-18S "135", PA-18AS "135", PA-18 "150", PA-18A "150", PA-18S "150", PA-18AS "150", PA-19 (Army L-18C), PA-19S | 1A2 | All fabric covered components | 1/1/2003 |

# FAA Approved Model List (AML) No. SA4503NM

| Item No. | Aircraft Make | Model | Original Type Certificate | Components | AML Amend. |
|---|---|---|---|---|---|
| 190 | Piper | Restricted Category PA-18A, PA-18A-135, PA-18A-150 | AR-7 | All fabric covered components | |
| 191 | Piper | PA-20, PA-20S, PA-20 "115", PA-20S "115", PA-20 "135", PA-20S "135" | 1A4 | All fabric covered components | |
| 192 | Piper | PA-22, -22-108, -22-135, -22S-135, -22-150, -22S-150, -22-160, -22S-160 | 1A6 | All fabric covered components | |
| 193 | Piper | PA-25, -25-235, -25-260 | 2A8 / 2A10 | All fabric covered components | 1/1/2003 |
| 194 | Pitcairn Autogyro | PA-5 | ATC 18 | All fabric covered components | 1/1/2003 |
| **195** | **Pitcairn Autogyro** | **PA-18** | **ATC 478** | **All fabric covered components** | **6/1/2008** |
| 196 | Pitts | S-1S, S-1T, S-2, S-2A, S-2S, S-2B | A8SO | All fabric covered components | 1/1/2003 |
| 197 | Porterfield | CP-50 | TC 690 | All fabric covered components | 1/1/2003 |
| 198 | Porterfield (Rankin) | CP-55, -65, CS-65, FP-65, LP-65 | A-720 | All fabric covered components | 1/1/2003 |
| 199 | Porterfield (Rankin) | 35, 35-70 | ATC 567 | All fabric covered components | |
| 200 | Pratt, Reed (Gould) | PR-G1 (Army TG-32, Navy LNE-1) Glider | GTC 12 | All fabric covered components | 1/1/2003 |
| 201 | PZL-Krosno | KR-03A Puchatek | G56EU | All fabric covered components | 1/1/2003 |
| 202 | Rearwin (Commonwealth) | 175, 180, 180F, 185, 190F | A-729 | All fabric covered components | |
| 203 | Commonwealth (Pigman/Reed) | Rearwin 6000M | TC 661 | All fabric covered components | |
| 204 | Commonwealth | Rearwin 7000 | TC 574 | All fabric covered components | 1/1/2003 |
| 205 | Rearwin (Pigman) | Rearwin 8090, 8125, 8135 (Army UC-102A), 8135T | TC 711 | All fabric covered components | 1/1/2003 |
| 206 | Commonwealth (Pigman/Reed) | Rearwin 9000, 9000 Deluxe | TC 624 | All fabric covered components | |
| **207** | **Roos Aircraft Co.** | **Roos-Lincoln PT-W** | **ATC 284** | **All fabric covered components** | **6/1/2008** |
| 208 | Rose Aeroplane and Motor Company | Parakeet A-1 | TC 2-514 | All fabric covered components | 1/1/2003 |
| 209 | Ryan Aeronautical | ST-3KR (Army PT-22, -22A) | A-749 | All fabric covered components | |
| 210 | Ryan Aeronautical | ST-A | ATC 571 | All fabric covered components | 1/1/2003 |
| 211 | Ryan Aeronautical | SCW-145 | TC 658 | All fabric covered components | |
| 212 | Scheibe-Flugzeugbau | Bergfalke II/55, III Gliders | 7G9 | All fabric covered components | 1/1/2003 |

# FAA Approved Model List (AML) No. SA4503NM

| Item No. | Aircraft Make | Model | Original Type Certificate | Components | AML Amend. |
|---|---|---|---|---|---|
| 213 | Scheibe-Flugzeugbau | Zugvogel IIIB Glider | G4EU | All fabric covered components | 1/1/2003 |
| 214 | Schempp-Hirth | SHK1 Glider | G9EU | All fabric covered components | 1/1/2003 |
| 215 | Schempp-Hirth | Standard Austria-S Glider | G1IN | All fabric covered components | |
| 216 | Schleicher | Ka 6, Ka 6B, Ka 6C, Ka 6CR, Ka 6CR-Pe, KA 6E Gliders | 7G1 | All fabric covered components | 1/1/2003 |
| 217 | Schleicher | K7, Ka2b Gliders | 7G3 | All fabric covered components | 1/1/2003 |
| 218 | Schleicher | K8, K8B Gliders | 7G4 | All fabric covered components | 1/1/2003 |
| 219 | Schleicher | AS-K13 Glider | G15EU | All fabric covered components | 1/1/2003 |
| 220 | Schweizer | SGU-1-19, -19A Gliders | G-17 | All fabric covered components | 1/1/2003 |
| 221 | Schweizer | SGU 2-22, -22A, -22B, -22C, -22CK, -22E, -22EK Gliders | G-18 | All fabric covered components | |
| 222 | Schweizer | SGS 1-26, -26A, -26B, -26C, -26D, -26E Gliders | 1G10 | All fabric covered components | 1/1/2003 |
| 223 | Schweizer | SGS 2-8, SGS 2-8A Gliders | GTC 5 | All fabric covered components | 1/1/2003 |
| 224 | Schweizer | SGS 2-32 Glider | G1EA | All fabric covered components | 1/1/2003 |
| 225 | Schweizer | SGS 2-33, -33A, -33AK Gliders | G2EA | All fabric covered components | 1/1/2003 |
| 226 | Schweizer | SGS1-34, -34R Gliders | G3EA | All fabric covered components | 1/1/2003 |
| 227 | Schweizer | TG-3A Army Glider | TC G-2-11 | All fabric covered components | |
| 228 | Sikorsky | VS-44-A | TC 752 | All fabric covered components | |
| 229 | Spartan | 7W (Army UC-71) | TC 628 | All fabric covered components | |
| 230 | Stearman | C-3-B | ATC 55 | All fabric covered components | 1/1/2003 |
| 231 | Stearman-Hammond | Y1S | TC 644 | All fabric covered components | 1/1/2003 |
| 232 | Stearman-Boeing | A75L3, 75 (Army PT-13), A75 (Army PT-13A, -13B,-13C), B75 (Navy N2S-2), E75 (Army PT-13D; Navy N2S-5; PT-13D/N2S-5), A75J1 (Army PT-18), A75L300, A75N1 (Army PT-17, -17A; Navy N2S-1, -4), B75N1 (Navy N2S-3), D75N1 (Army PT-27), IB75A, E75N1 | A-743 | All fabric covered components | |
| 233 | Stearman-Boeing | 4-C | TC 2-155 | All fabric covered components | |
| 234 | Stearman | 4E | ATC 292 | All fabric covered components | 1/1/2003 |
| **235** | **Stinson** | **SM-2AA** | **ATC 145** | **All fabric covered components** | **6/1/2008** |

# FAA Approved Model List (AML) No. SA4503NM

| Item No. | Aircraft Make | Model | Original Type Certificate | Components | AML Amend. |
|---|---|---|---|---|---|
| 236 | Stinson | SM-8A | ATC 295 | All fabric covered components | |
| 237 | Stinson | SM-8B, -8BT | ATC 294 | All fabric covered components | 1/1/2003 |
| 238 | Stinson | SR-5, -5A (Army L-12), -5B, -5C, -5E | ATC 530 | All fabric covered components | 1/1/2003 |
| 239 | Stinson | SR-7A, -7B, -7C | ATC 594 | All fabric covered components | |
| 240 | Stinson | SR-8A, SR-8B (Army UC-81), SR-8C (Army UC-81L) | ATC 608 | All fabric covered components | |
| 241 | Stinson | SR-8D (Army UC-81B), SR-8E | ATC 609 | All fabric covered components | |
| 242 | Stinson | SR-9A, SR-9B (Army UC-81N), SR-9C (Army UC-81C) | ATC 621 | All fabric covered components | |
| 243 | Stinson | SR-9D (Army UC-81G), SR-9DM, SR-9E (Army UC-81J), SR-9EM (Army UC-81M) | ATC 625 | All fabric covered components | |
| 244 | Stinson | SR-9F (Army UC-81E) | ATC 640 | All fabric covered components | |
| 245 | Stinson | HW-75, 10 | A-709 | All fabric covered components | |
| 246 | Stinson | 10A (Army L-9B), 10B | A-738 | All fabric covered components | |
| 247 | Stinson | Army L-1 | LTC-26 | All fabric covered components | |
| 248 | Stinson | L-5, -5B, -5C, -5D, -5E, -5E-1, -5G | A-764 | All fabric covered components | |
| 249 | Stinson | 108, 108-1, -2, -3, -5 | A-767 | All fabric covered components | 1/1/2003 |
| 250 | Stinson | V-77 (Army AT-19) | A-774 | All fabric covered components | |
| 251 | Taylorcraft | Model A | A-643 | All fabric covered components | 1/1/2003 |
| 252 | Taylorcraft | DC-65 (Army L-2, -2C), DCO-65 (Army L-2A, -2B, -2M), DF-65 (Army L-2E), DL-65 (Army L-2D) | A-746 | All fabric covered components | 1/1/2003 |
| 253 | Taylorcraft | BC, BCS, BC-65, BCS-65, BC12-65 (Army L-2H), BCS12-65, BC12-D, BCS12-D, BC12-D1, BCS12-D1, BC12D-85, BCS12D-85, BC12D-4-85, BCS12D-4-85 | A-696 | All fabric covered components | 1/1/2003 |
| 254 | Taylorcraft | BF (Army L-2G), BFS, BF-60, BFS-60, BF-65, BFS-65, BF12-65 (Army L-2K), BFS12-65 | A-699 | All fabric covered components | |
| 255 | Taylorcraft | BL, BLS, BL-65 (Army L-2F), BLS-65, BL12-65 (Army L-2J), BLS12-65 | A-700 | All fabric covered components | |
| 256 | Taylorcraft | 19, F19, F21, F21A, F21B, F22, F22A | 1A9 | All fabric covered components | 1/1/2003 |
| 257 | Taylorcraft (Helio) | Model 15A, 20 | 3A3 | All fabric covered components | |

# FAA Approved Model List (AML) No. SA4503NM

| Item No. | Aircraft Make | Model | Original Type Certificate | Components | AML Amend. |
|---|---|---|---|---|---|
| 258 | Travel Air (Curtiss-Wright) | Travel Air 12-W | ATC 407 | All fabric covered components | |
| **259** | **Travel Air (Curtiss-Wright)** | **Travel Air 3000** | **ATC 31** | **All fabric covered components** | **6/1/2008** |
| 260 | Travel Air (Curtiss-Wright) | Travel Air 4000 | ATC 32 | All fabric covered components | |
| 261 | Travel Air (Curtiss-Wright) | Travel Air B-4000 | ATC 146 | All fabric covered components | |
| 262 | Travel Air (Curtiss-Wright) | Travel Air B9-4000 | TC 2-381 | All fabric covered components | |
| 263 | Travel Air (Curtiss-Wright) | Travel Air C-4000 | ATC 149 | All fabric covered components | |
| 264 | Travel Air (Curtiss-Wright) | Travel Air D-4D | TC 2-178 | All fabric covered components | |
| 265 | Travel Air (Curtiss-Wright) | Travel Air D-4000 | TC 2-84 | All fabric covered components | |
| 266 | Travel Air (Curtiss-Wright) | Travel Air E-4000 | ATC 188 | All fabric covered components | |
| 267 | Travel Air (Curtiss-Wright) | Travel Air K-4000 | ATC 205 | All fabric covered components | |
| 268 | Travel Air (Curtiss-Wright/Parks) | Travel Air L-4000 | TC 2-560 | All fabric covered components | |
| 269 | Travel Air (Curtiss-Wright) | Travel Air W-4000 | ATC 112 | All fabric covered components | |
| 270 | Waco | ASO | ATC 41 | All fabric covered components | 1/1/2003 |
| 271 | Waco | AVN-8 | TC 677 | All fabric covered components | |
| 272 | Waco | CSO | ATC 240 | All fabric covered components | 1/1/2003 |
| 273 | Waco | CTO | ATC 257 | All fabric covered components | 1/1/2003 |
| 274 | Waco | CUC-1, CUC-2 | ATC 575 | All fabric covered components | 1/1/2003 |
| 275 | Waco | GXE | ATC 13 | All fabric covered components | 1/1/2003 |
| **276** | **Waco** | **INF** | **ATC 345** | **All fabric covered components** | **6/1/2008** |
| 277 | Waco | QCF | ATC 416 | All fabric covered components | 1/1/2003 |
| 278 | Waco | RNF | ATC 311 | All fabric covered components | |
| 279 | Waco | UBF | ATC 473 | All fabric covered components | |

# FAA Approved Model List (AML) No. SA4503NM

| Item No. | Aircraft Make | Model | Original Type Certificate | Components | AML Amend. |
|---|---|---|---|---|---|
| 280 | Waco | UEC | ATC 467 | All fabric covered components | |
| 281 | Waco | UIC | ATC 499 | All fabric covered components | |
| **282** | **Waco** | **UKS-7** | **ATC 648** | **All fabric covered components** | **6/1/2008** |
| 283 | Waco | UPF-7, VPF-7 | A-642 | All fabric covered components | |
| 284 | Waco | YKS-7 (Army UC-72K), ZKS-7 (Army UC-72M) | TC 626 | All fabric covered components | |
| **285** | **Waco** | **YMF-5** | **ATC 542** | **All fabric covered components** | **6/1/2008** |
| **286** | **Waco** | **YPF** | **ATC 586** | **All fabric covered components** | **6/1/2008** |
| **287** | **Waco** | **ZKS-6** | **A-533** | **All fabric covered components** | **6/1/2008** |
| 288 | White Aircraft Corp. | New Standard D25 | ATC 108 | All fabric covered components | 1/1/2003 |

Note: When a design is changed to metal skin and manufactured under the same TC number (e.g., the Luscombe Model 8, all models optional fabric or metal covered wing), our STC is applicable only to those models with fabric covered components. Check the aircraft nameplate for the TC number or check with the local FAA FSDO.

# CECONITE COVERING MATERIAL ESTIMATES

These estimates are furnished as a service to assist in selecting quantities of basic materials. If your aircraft is not listed, use the numbers for the most similar aircraft and you'll get a close approximation of quantities. Final determination of quantities is the option of the customer.

| Aircraft and Components | Linear yards of 70-inch fabric unless Light (66-inch) for plywood surfaces is listed. | NEW SUPER SEAM Fabric Cement | RAND-O-PROOF Nitrate Dope,Gal (Thin 1:1) | 286 Nitrate Thinner, Gal | Polyester Finishing Tape Rolls ("B" = Bias) | Rib Lacing Cord (See Note 1) | Reinforcing Tape (Width same as cap strip) | Clear Non-Tautening Butyrate Dope,Gal (Thin 1:1) | RAND-O-FILL Silver Butyrate Dope,Gal (Thin 1:1) | 9703 Butyrate Thinner for Clear BD and Rand-O-Fill, Gal | Y-9910 Universal Blush Retarder, Gal | Colored Butyrate Dope Top Coat,Gal (Thin 1:1) (See Note 2) | 9703 Butyrate Thinner for Colored Butyrate, Gal | Optional RANTHANE HS Polyurethane Finish, Gal (vice Colored Butyrate)(Reduce 3:1 with G-4200) (See Note 2) |
|---|---|---|---|---|---|---|---|---|---|---|---|---|---|---|
| **NOTE 1:** Delete rib lacing thread for those model aircraft that use wire clips or screws instead of rib lacing. | | | | | | | | | | | | | | |
| **NOTE 2:** Quantity estimates of COLORED BUTYRATE and RANTHANE finishes are based on fabric covered areas. Add appropriate additional amount for large metal portions of aircraft. | | | | | | | | | | | | | | |
| **NOTE 3:** Add 1 spool polyester machine sewing thread if envelopes or a blanket are to be sewn. | | | | | | | | | | | | | | |
| **NOTE 4:** "Wet goods" are sold in both gallons and quarts. A gallon equals 4 quarts. 1/4 = 1 quart, 1/2 = 2 quarts, 3/4 = 3 quarts. | | | | | | | | | | | | | | |
| **Light aircraft size & configuration of: AERONCA CHAMPION, AERONCA CHIEF, CALLAIR, CITABRIA, FUNK, INTERSTATE CADET, PIPER J-3, -4, -5, PA-11, -12, -14, -18, -25, PORTERFIELD, REARWIN, TAYLORCRAFT, etc.** | | | | | | | | | | | | | | |
| Complete Aircraft | 45 yd | 1 Gal | 5 | 5 | 1(1"), 7(2"), 2(3"), 1(4"), 1(3"B), 1(4"B) | 1 | 2(1/2") | 10 | 10 | 20 | 4 | 10 | 10 | 4 |
| 2 Wings & Ailerons | 25 yd | 2 Qt | 2 3/4 | 2 3/4 | 4(2"), 2(3"), 1(4"), 1(4"B) | 1 | 2(1/2") | 5 1/2 | 5 1/2 | 11 | 2 1/4 | 5 1/2 | 5 1/2 | 2 1/2 |
| Fuselage | 11 yd | 1 Qt | 1 1/4 | 1 1/4 | 1(1"), 2(2") | | | 2 1/2 | 2 1/2 | 5 | 1 | 2 1/2 | 2 1/2 | 1 |
| 5 Tail Surfaces | 9 yd | 1 Qt | 1 | 1 | 2(2"), 1(3"B) | 50' | 1(1/2") | 2 | 2 | 4 | 1 | 2 | 2 | 1 |
| Complete Less Fuselage | 34 yd | 3 Qt | 3 3/4 | 3 3/4 | 5(2"), 2(3"), 1(4"), 1(3"B), 1(4"B) | 1 | 2(1/2") | 7 1/2 | 7 1/2 | 15 | 3 | 7 1/2 | 7 1/2 | 3 |
| Complete Less 2 Wings | 20 yd | 2 Qt | 2 1/4 | 2 1/4 | 1(1"), 3(2"), 1(3"B) | 50' | 1(1/2") | 4 1/2 | 4 1/2 | 9 | 1 3/4 | 4 1/2 | 4 1/2 | 2 |
| All Control Surfaces | 11 yd | 1 Qt | 1 1/4 | 1 1/4 | 2(2"), 1(3"), 1(3"B) | 50' | 1(1/2") | 2 1/2 | 2 1/2 | 5 | 1 | 2 1/2 | 2 1/2 | 1 |
| **Light aircraft size & configuration of: PIPER PA-15, 16, 17, 20, 22, etc.** | | | | | | | | | | | | | | |
| Complete Aircraft | 40 yd | 1 Gal | 4 1/2 | 4 1/2 | 1(1"), 6(2"), 2(3"), 1(4"), 1(3"B), 1(4"B) | 1 | 1(1/2") | 9 | 9 | 18 | 3 1/2 | 9 | 9 | 3 3/4 |
| Fuselage | 11 yd | 1 Qt | 1 1/4 | 1 1/4 | 1(1"), 2(2") | | | 2 1/2 | 2 1/2 | 5 | 1 | 2 1/2 | 2 1/2 | 1 |
| 2 Wings & Ailerons | 24 yd | 2 Qt | 2 3/4 | 2 3/4 | 4(2"), 2(3"), 1(4"), 1(4"B) | 1 | 1(1/2") | 5 1/2 | 5 1/2 | 11 | 2 1/4 | 5 1/2 | 5 1/2 | 2 1/4 |
| 5 Tail Surfaces | 9 yd | 1 Qt | 1 | 1 | 2(2"), 1(3"B) | 50' | 1(1/2") | 2 | 2 | 4 | 1 | 2 | 2 | 1 |
| Complete Less Fuselage | 29 yd | 3 Qt | 3 1/4 | 3 1/4 | 5(2"), 2(3"), 1(4"), 1(3"B) 1(4"B) | 1 | 1(1/2") | 6 1/2 | 6 1/2 | 13 | 2 1/2 | 6 1/2 | 6 1/2 | 2 3/4 |
| Complete Less 2 Wings | 28 yd | 1 Gal | 3 1/4 | 3 1/4 | 1(1"), 3(2"), 1(3"B) | 50' | 1(1/2") | 6 1/4 | 6 1/4 | 12 1/2 | 2 1/2 | 6 1/4 | 6 1/4 | 2 1/2 |

# CECONITE COVERING MATERIAL ESTIMATES

| Aircraft and Components | Linear yards of 70-inch fabric unless Light (66-inch) for plywood surfaces is listed. | NEW SUPER SEAM Fabric Cement | RAND-O-PROOF Nitrate Dope,Gal (Thin 1:1) | 286 Nitrate Thinner, Gal | Polyester Finishing Tape Rolls ("B" = Bias) | Rib Lacing Cord (See Note 1) | Reinforcing Tape (Width same as cap strip) | Clear Non-Tautening Butyrate Dope,Gal (Thin 1:1) | RAND-O-FILL Silver Butyrate Dope,Gal (Thin 1:1) | 9703 Butyrate Thinner for Clear BD and Rand-O-Fill, Gal | Y-9910 Universal Blush Retarder, Gal | Colored Butyrate Dope Top Coat,Gal (Thin 1:1) (See Note 2) | 9703 Butyrate Thinner for Colored Butyrate, Gal | Optional RANTHANE HS Polyurethane Finish, Gal (vice Colored Butyrate)(Reduce 3:1 with G-4200) (See Note 2) |
|---|---|---|---|---|---|---|---|---|---|---|---|---|---|---|
| **AERONCA 15AC Fuselage & Tail** | 30 yd | 2 Qt | 3 1/2 | 3 1/2 | 1(1"), 2(2"), 1(3"), 1(4"B) | | 1(3/8") | 6 3/4 | 6 3/4 | 13 1/2 | 2 3/4 | 6 3/4 | 6 3/4 | 2 3/4 |
| **BEECH STAGGERWING D-17 & WACO CABIN** | 70 yd | 1 Gal 2 Qt | 7 3/4 | 7 3/4 | 2(1"),14(2"), 2(3"), 1(4"), 1(3"B), 1(4"B) | 2 | 6(3/8") | 15 1/2 | 15 1/2 | 31 | 6 1/4 | 15 1/2 | 15 1/2 | 6 1/4 |
| **BELLANCA MODEL 14** | | | | | | | | | | | | | | |
| Complete Aircraft | 21 yd 33 yd Lt | 3 Qt | 6 | 6 | 5(2"), 1(3") | 1 | 1(3/8") | 12 | 12 | 24 | 5 | 12 | 12 | 4 3/4 |
| Control Surfaces | 7 yd | 1 Qt | 3 Qt | 3 Qt | 2(2"), 1(3") | 50' | 1(3/8") | 1 1/2 | 1 1/2 | 3 | 3 Qt | 1 1/2 | 1 1/2 | 3 Qt |
| **BUCHER JUNGMIESTER** | 40 yd | 3 Qt | 4 1/2 | 4 1/2 | 2(1"), 7(2"), 1(3") | 1 | 1(3/8") | 9 | 9 | 18 | 3 1/2 | 9 | 9 | 3 3/4 |
| **CESSNA 120/140/170 Wings** | 25 yd | 1 Qt | 2 3/4 | 2 3/4 | 4(2"), 1(3"), 1(4"), 1(4"B) | | 1(1/2") | 5 1/2 | 5 1/2 | 11 | 2 1/4 | 5 1/2 | 5 1/2 | 2 1/2 |
| **CESSNA UC-78 (T-50)** | 140 yd | 2 Gal | 15 1/2 | 15 1/2 | 2(1"), 30(2"), 3(3"), 1(4"), 1(3"B), 1(4"B) | 3 | 7(3/8") | 31 | 31 | 62 | 12 3/4 | 31 | 31 | 12 1/2 |
| **CONSOLIDATED VULTEE BT-13 Control Surfaces** | 12 yd | 1 Qt | 1 1/2 | 1 1/2 | 2(2"), 1(3") | | 1(1/2") | 2 3/4 | 2 3/4 | 5 1/2 | 1 | 2 3/4 | 2 3/4 | 1 1/4 |
| **CULVER CADET** | 23 yd | 2 Qt | 2 1/2 | 2 1/2 | 4(2"), 1(3"), 1(4"), 1(4"B) | 1 | 1(1/2") | 5 1/4 | 5 1/4 | 10 1/2 | 2 | 5 1/4 | 5 1/4 | 2 |
| **DOUGLAS DC-3** | 30 yd | 1 Gal | 3 1/2 | 3 1/2 | 6(2"), 2(3"), 1(3"B) | 1 | 1(1/2") | 6 3/4 | 6 3/4 | 13 1/2 | 2 3/4 | 6 3/4 | 6 3/4 | 2 3/4 |
| **DeHAVILLAND CHIPMUNK DH-C1** | 30 yd | 2 Qt | 3 1/2 | 3 1/2 | 4(2"), 1(3"), 1(4") | | 1(1/2") | 6 3/4 | 6 3/4 | 13 1/2 | 2 3/4 | 6 3/4 | 6 3/4 | 2 3/4 |
| **ERCOUPE Both Wings** | 17 yd | 1 Qt | 2 | 2 | 2(2"), 1(3"), 1(4"), 1(4"B) | | 1(1/2") | 3 3/4 | 3 3/4 | 7 1/2 | 1 1/2 | 3 3/4 | 3 3/4 | 1 1/2 |
| **FAIRCHILD 24** | 47 yd 8 yd Lt | 3 Qt | 6 1/4 | 6 1/4 | 1(1"), 8(2"), 2(3"), 1(4"), 1(4"B) | 1 | 2(3/8") | 12 1/4 | 12 1/4 | 24 1/2 | 5 | 12 1/4 | 12 1/4 | 5 |
| **FAIRCHILD PT-19, 23, 26** | 32 yd 33 yd Lt | 1 Gal | 7 1/4 | 7 1/4 | 1(1"), 2(2"), 1(3") | 50' | 1(1/2") | 14 1/2 | 14 1/2 | 29 | 5 3/4 | 14 1/2 | 14 1/2 | 6 |

# CECONITE COVERING MATERIAL ESTIMATES

| Aircraft and Components | Linear yards of 70-inch fabric unless Light (66-inch) for plywood surfaces is listed. | NEW SUPER SEAM Fabric Cement | RAND-O-PROOF Nitrate Dope,Gal (Thin 1:1) | 286 Nitrate Thinner, Gal | Polyester Finishing Tape Rolls ("B" = Bias) | Rib Lacing Cord (See Note 1) | Reinforcing Tape (Width same as cap strip) | Clear Non-Tautening Butyrate Dope,Gal (Thin 1:1) | RAND-O-FILL Silver Butyrate Dope,Gal (Thin 1:1) | 9703 Butyrate Thinner for Clear BD and Rand-O-Fill, Gal | Y-9910 Universal Blush Retarder, Gal | Colored Butyrate Dope Top Coat,Gal (Thin 1:1) (See Note 2) | 9703 Butyrate Thinner for Colored Butyrate, Gal | Optional RANTHANE HS Polyurethane Finish, Gal (vice Colored Butyrate)(Reduce 3:1 with G-4200) (See Note 2) |
|---|---|---|---|---|---|---|---|---|---|---|---|---|---|---|
| **FLEET, FRENCH STAMPE, GREAT LAKES, PJ-260, TRAVEL AIR 12 & 16E, etc.** | | | | | | | | | | | | | | |
| Complete Aircraft | 60 yd | 1 Gal | 6 3/4 | 6 3/4 | 1(1"),10(2"), 2(3"), 1(4"), 1(4"B) | 1 | 4(3/8") | 13 1/2 | 13 1/2 | 27 | 5 1/2 | 13 1/2 | 13 1/2 | 5 1/4 |
| 4 Wings | 36 yd | 2 Qt | 4 | 4 | 10(2"), 2(3"), 1(4"), 1(4"B) | 1 | 4(3/8") | 8 | 8 | 16 | 3 1/4 | 8 | 8 | 3 1/2 |
| **GRUMMAN AG-CAT** | 24 yd | 2 Qt | 2 3/4 | 2 3/4 | 4(2"), 1(3"), 1(4") | | 1(3/8") | 5 1/2 | 5 1/2 | 11 | 2 1/4 | 5 1/2 | 5 1/2 | 2 1/4 |
| **HOWARD DGA 15** | 25 yd<br>33 yd Lt | 1 Gal | 6 1/2 | 6 1/2 | 1(1"),10(2"), 2(3"), 1(4"), 1(4"B) | 1 | 2(1/4") | 13 | 13 | 26 | 5 1/4 | 13 | 13 | 5 1/4 |
| **LUSCOMBE MODEL 8** | 22 yd | 1 Qt | 2 1/2 | 2 1/2 | 4(2"), 1(3"), 1(4") | 1 | 1(1/2") | 5 | 5 | 10 | 2 | 5 | 5 | 2 |
| **MAULE** | 28 yd | 1 Gal | 3 1/4 | 3 1/4 | 1(1"), 5(2"), 1(3"), 1(4") | 1 | 1(1/2") | 6 1/4 | 6 1/4 | 12 1/2 | 2 1/2 | 6 1/4 | 6 1/4 | 2 1/2 |
| **MOONEY MITE M-18** | 12 yd<br>20 yd Lt | 2 Qt | 3 1/2 | 3 1/2 | 1(1"), 2(2"), 1(3") | 1 | 1(3/8") | 7 1/4 | 7 1/4 | 14 1/2 | 3 | 7 1/4 | 7 1/4 | 3 |
| **NORTH AMERICAN BC-1A, AT-6, -6A, -6B, -6C, -6D, -6F, -6G, T-6G** | | | | | | | | | | | | | | |
| Rudder, 2 Elevators, Ailerons | 9 yd | 1 Qt | 1 | 1 | 2(2"), 2(3"), 1(4") | | 1(1/2") | 2 | 2 | 4 | 1 | 2 | 2 | 1 |
| 2 Ailerons | 3 yd | 1 Qt | 2 Qt | 2 Qt | 1(2"), 1(3") | | 1(1/2") | 3 Qt | 3 Qt | 1 1/2 | 1 Qt | 3 Qt | 3 Qt | 2 Qt |
| Rudder, 2 Ailerons | 6 1/2 yd | 1 Qt | 3 Qt | 3 Qt | 2(2"), 1(3") | | 1(1/2") | 1 1/2 | 1 1/2 | 3 | 2 Qt | 1 1/2 | 1 1/2 | 3 Qt |
| **RYAN PT-22 & RYAN ST** | 29 yd | 2 Qt | 3 1/4 | 3 1/4 | 3(2"), 1(3"), 1(4"), 1(4"B) | 1 | 1(1/2") | 6 1/2 | 6 1/2 | 13 | 2 1/2 | 6 1/2 | 6 1/2 | 2 3/4 |
| **RYAN BROUGHAM** | 78 yd | 1 Gal | 8 3/4 | 8 3/4 | 1(1"),11(2"), 2(3"),1(4"), 1(4"B) | 1 | 3(1/2") | 17 1/2 | 17 1/2 | 35 | 7 | 17 1/2 | 17 1/2 | 7 |

# CECONITE COVERING MATERIAL ESTIMATES

| Aircraft and Components | Linear yards of 70-inch fabric unless Light (66-inch) for plywood surfaces is listed. | NEW SUPER SEAM Fabric Cement | RAND-O-PROOF Nitrate Dope,Gal (Thin 1:1) | 286 Nitrate Thinner, Gal | Polyester Finishing Tape Rolls ("B" = Bias) | Rib Lacing Cord (See Note 1) | Reinforcing Tape (Width same as cap strip) | Clear Non-Tautening Butyrate Dope,Gal (Thin 1:1) | RAND-O-FILL Silver Butyrate Dope,Gal (Thin 1:1) | 9703 Butyrate Thinner for Clear BD and Rand-O-Fill, Gal | Y-9910 Universal Blush Retarder, Gal | Colored Butyrate Dope Top Coat,Gal (Thin 1:1) (See Note 2) | 9703 Butyrate Thinner for Colored Butyrate, Gal | Optional RANTHANE HS Polyurethane Finish, Gal (vice Colored Butyrate)(Reduce 3:1 with G-4200) (See Note 2) |
|---|---|---|---|---|---|---|---|---|---|---|---|---|---|---|
| **STEARMAN-BOEING PT-13, -17, -18, -27, N2S-3, NAVY N3N, TRAVEL AIR 4000, WACO UPF-7, etc.** | | | | | | | | | | | | | | |
| Complete Aircraft | 65 yd | 1 Gal | 7 1/4 | 7 1/4 | 1(1"),11(2"), 2(3"), 2(4"), 1(4"B) | 1 | 4(3/8") | 14 1/2 | 14 1/2 | 29 | 5 3/4 | 14 1/2 | 14 1/2 | 5 3/4 |
| 4 Wing Panels | 40 yd | 3 Qt | 4 1/2 | 4 1/2 | 11(2"),2(3"), 2(4"), 1(4"B) | 1 | 3(3/8") | 9 | 9 | 18 | 3 1/2 | 9 | 9 | 3 3/4 |
| Fuselage | 12 yd | 1 Qt | 1 1/2 | 1 1/2 | 1(1"), 2(2") | | | 2 3/4 | 2 3/4 | 5 1/2 | 1 | 2 3/4 | 2 3/4 | 1 1/4 |
| 6 Tail Surfaces | 13 yd | 2 Qt | 1 1/2 | 1 1/2 | 3(2"), 1(3"), 1(4"B) | 50' | 1(3/8") | 3 | 3 | 6 | 1 1/4 | 3 | 3 | 1 1/4 |
| **STINSON 10, 10A, 10B, HW-75** | 42 yd 5 yd Lt | 2 Qt | 5 1/4 | 5 1/4 | 1(1"), 6(2"), 1(3"), 1(4"), 1(4"B) | | 1(1/2") | 10 1/2 | 10 1/2 | 21 | 4 1/4 | 10 1/2 | 10 1/2 | 4 1/4 |
| **STINSON 108** | | | | | | | | | | | | | | |
| Complete Aircraft | 40 yd | 2 Qt | 4 1/2 | 4 1/2 | 1(1"), 6(2"), 1(3"), 1(4") | | 1(1/2") | 9 | 9 | 18 | 3 1/2 | 9 | 9 | 3 3/4 |
| Fuselage | 14 yd | 2 Qt | 1 1/2 | 1 1/2 | 1(1"), 2(2") | | | 3 1/4 | 3 1/4 | 6 1/2 | 1 1/4 | 3 1/4 | 3 1/4 | 1 1/2 |
| 2 Wings & Ailerons | 25 yd | 1 Qt | 2 3/4 | 2 3/4 | 5(2"), 1(3"), 1(4") | | 1(1/2"), 1(3/8") | 5 1/2 | 5 1/2 | 11 | 2 1/4 | 5 1/2 | 5 1/2 | 2 1/2 |
| **STINSON AT-19 & V-77** | | | | | | | | | | | | | | |
| Complete Aircraft | 78 yd | 1 Gal | 8 3/4 | 8 3/4 | 1(1"),11(2"), 2(3"), 1(4"), 1(4"B) | 2 | 4(3/8") | 17 1/2 | 17 1/2 | 35 | 7 | 17 1/2 | 17 1/2 | 7 |
| 2 Wings | 41 yd | 1 Gal | 4 1/2 | 4 1/2 | 6(2"), 2(3"), 1(4"), 1(4"B) | 2 | 4(3/8") | 9 | 9 | 18 | 3 3/4 | 9 | 9 | 3 3/4 |
| **STINSON L-5** | 45 yd 5 yd Lt | 2 Qt | 5 1/2 | 5 1/2 | 6(2"), 1(3"), 1(4") | | 1(1/2") | 11 1/4 | 11 1/4 | 22 1/2 | 4 1/2 | 11 1/4 | 11 1/4 | 4 1/2 |

# CECONITE COVERING MATERIAL ESTIMATES

| Aircraft and Components | Linear yards of 70-inch fabric unless Light (66-inch) for plywood surfaces is listed. | NEW SUPER SEAM Fabric Cement | RAND-O-PROOF Nitrate Dope,Gal (Thin 1:1) | 286 Nitrate Thinner, Gal | Polyester Finishing Tape Rolls ("B" = Bias) | Rib Lacing Cord (See Note 1) | Reinforcing Tape (Width same as cap strip) | Clear Non-Tautening Butyrate Dope,Gal (Thin 1:1) | RAND-O-FILL Silver Butyrate Dope,Gal (Thin 1:1) | 9703 Butyrate Thinner for Clear BD and Rand-O-Fill, Gal | Y-9910 Universal Blush Retarder, Gal | Colored Butyrate Dope Top Coat,Gal (Thin 1:1) (See Note 2) | 9703 Butyrate Thinner for Colored Butyrate, Gal | Optional RANTHANE HS Polyurethane Finish, Gal (vice Colored Butyrate)(Reduce 3:1 with G-4200) (See Note 2) |
|---|---|---|---|---|---|---|---|---|---|---|---|---|---|---|
| **HOMEBUILT/SPORT AIRCRAFT** | | | | | | | | | | | | | | |
| **Aircraft size & configuration of: BOWER'S FLY-BABY, BOWER'S NAMU II, CORBEN BABY ACE, PIETENPOL, STOLP STARLET** | | | | | | | | | | | | | | |
| Complete Aircraft | 32 yd | 2 Qt | 3 1/2 | 3 1/2 | 1(1"), 5(2"), 1(3") | 1 | 1(3/8") | 7 1/4 | 7 1/4 | 14 1/2 | 3 | 7 1/4 | 7 1/4 | 3 |
| 2 Wings 26' Span x 4 1/2' Chord | 22 yd | 1 Qt | 2 1/2 | 2 1/2 | 3(2"), 1(3") | 1 | 1(3/8") | 5 | 5 | 10 | 2 | 5 | 5 | 2 |
| **AVID FLYER, KITFOX** | 38 yd | 2 Qt | 4 1/4 | 4 1/4 | 5(2"), 1(3"), 1(4"), 1(4"B) | 1 | 2(1/2") | 8 1/2 | 8 1/2 | 17 | 3 1/2 | 8 1/2 | 8 1/2 | 3 1/2 |
| **BABY GREAT LAKES, MONG, PITTS S-1C, SMITH MINI-PLANE, SUNDAY KNIGHT TWISTER** | | | | | | | | | | | | | | |
| Complete Aircraft | 25 yd | 3 Qt | 2 3/4 | 2 3/4 | 1(1"), 5(2"), 1(3"), 1(4") | 1 | 1(3/8") | 5 1/2 | 5 1/2 | 11 | 2 1/4 | 5 1/2 | 5 1/2 | 2 1/2 |
| 4 Wing Panels | 20 yd | 2 Qt | 2 1/4 | 2 1/4 | 5(2"), 1(3"), 1(4") | 1 | 1(3/8") | 4 1/2 | 4 1/2 | 9 | 1 3/4 | 4 1/2 | 4 1/2 | 2 |
| **CHALLENGER** | 38 yd | 1 Gal | 4 1/4 | 4 1/4 | 6(2"), 2(3"), 1(4") | | | 8 1/2 | 8 1/2 | 17 | 3 1/2 | 8 1/2 | 8 1/2 | 3 1/2 |
| **EAA ACRO-SPORT, EAA BI-PLANE, STOLP STARDUSTER 100, etc.** | | | | | | | | | | | | | | |
| Complete Aircraft | 45 yd | 3 Qt | 5 | 5 | 1(1"), 6(2"), 1(3"), 1(4"), 1(4"B) | 1 | 1(3/8") | 10 | 10 | 20 | 4 | 10 | 10 | 4 |
| **HATZ, MARQUART CHARGER, STARDUSTER II, STEEN SKY BOLT, etc.** | | | | | | | | | | | | | | |
| Complete Aircraft | 50 yd | 3 Qt | 5 1/2 | 5 1/2 | 2(1"), 8(2"), 1(3"), 1(4"), 1(4"B) | 1 | 1(3/8") | 11 1/4 | 11 1/4 | 22 1/2 | 4 1/2 | 11 1/4 | 11 1/4 | 4 1/2 |
| **PIEL EMERAUDE** | 33 yd | 3 Qt | 3 3/4 | 3 3/4 | 6(2"), 2(3") | 1 | 1(3/8") | 7 1/2 | 7 1/2 | 15 | 3 | 7 1/2 | 7 1/2 | 3 |
| **SONERAI I Fuselage and Tail** | 12 yd | 1 Qt | 1 1/2 | 1 1/2 | 1(1 1/2") | | | 2 3/4 | 2 3/4 | 5 1/2 | 1 | 2 3/4 | 2 3/4 | 1 |
| **SONERAI II Fuselage and Tail** | 15 yd | 1 Qt | 1 3/4 | 1 3/4 | 1(1 1/2") | | | 3 1/2 | 3 1/2 | 7 | 1 1/2 | 3 1/2 | 3 1/2 | 1 1/2 |
| **VOLKSPLANE VP-1** | 19 yd 8 yd Lt | 2 Qt | 3 | 3 | 3(2"), 1(3") | 1 | 1(1/4") | 6 | 6 | 12 | 2 1/2 | 6 | 6 | 2 1/2 |
| **VOLKSPLANE VP-2** | 26 yd 10 yd Lt | 2 Qt | 4 | 4 | 5(2"), 1(3") | 1 | 2(1/4") | 8 | 8 | 16 | 3 1/4 | 8 | 8 | 3 1/2 |
| **WITTMAN TAILWIND** | 24 yd 12 yd Lt | 2 Qt | 4 | 4 | 1(1"), 1(2"), 1(3") | 50' | 1(3/8") | 8 | 8 | 16 | 3 1/4 | 8 | 8 | 3 1/2 |

# CECONITE COVERING MATERIAL ESTIMATES

| Aircraft and Components | Linear yards of 70-inch fabric unless Light (66-inch) for plywood surfaces is listed. | NEW SUPER SEAM Fabric Cement | RAND-O-PROOF Nitrate Dope,Gal (Thin 1:1) | 286 Nitrate Thinner, Gal | Polyester Finishing Tape Rolls ("B" = Bias) | Rib Lacing Cord (See Note 1) | Reinforcing Tape (Width same as cap strip) | Clear Non-Tautening Butyrate Dope,Gal (Thin 1:1) | RAND-O-FILL Silver Butyrate Dope,Gal (Thin 1:1) | 9703 Butyrate Thinner for Clear BD and Rand-O-Fill, Gal | Y-9910 Universal Blush Retarder, Gal | Colored Butyrate Dope Top Coat,Gal (Thin 1:1) (See Note 2) | 9703 Butyrate Thinner for Colored Butyrate, Gal | Optional RANTHANE HS Polyurethane Finish, Gal (vice Colored Butyrate)(Reduce 3:1 with G-4200) (See Note 2) |
|---|---|---|---|---|---|---|---|---|---|---|---|---|---|---|
| **GLIDERS** | | | | | | | | | | | | | | |
| **ASK-13 Fuselage** | 8 yd | 1 Qt | 1 | 1 | 1(2") | | | 1 3/4 | 1 3/4 | 3 1/2 | 3 Qt | 1 3/4 | 1 3/4 | 3 Qt |
| **BG-7 Fuselage & Tail Surfaces** | 14 yd | 1 Qt | 1 1/2 | 1 1/2 | 1(2") | 50' | 1(3/8") | 3 1/4 | 3 1/4 | 6 1/2 | 1 1/4 | 3 1/4 | 3 1/4 | 1 1/2 |
| **BG-12** | 31 yd | 2 Qt | 3 1/2 | 3 1/2 | 1(2") | | | 7 | 7 | 14 | 2 3/4 | 7 | 7 | 3 |
| **CHEROKEE II** | 50 yd | 3 Qt | 5 1/2 | 5 1/2 | 3(1") | | | 11 1/4 | 11 1/4 | 22 1/4 | 4 1/2 | 11 1/4 | 11 1/4 | 4 1/2 |
| **CHEROKEE II with R-M Wing** | 45 yd | 3 Qt | 5 | 5 | 3(2") | | | 10 | 10 | 20 | 4 | 10 | 10 | 4 |
| **SCHWEIZER 2-12 (T6-3A)** | 30 yd | 2 Qt | 3 1/2 | 3 1/2 | 2(2"), 1(3") | | | 6 3/4 | 6 3/4 | 13 1/2 | 2 3/4 | 6 3/4 | 6 3/4 | 2 3/4 |
| **SCHWEIZER 1-26A** | 24 yd | 2 Qt | 2 3/4 | 2 3/4 | 2(2"), 1(3") | | | 5 1/2 | 5 1/2 | 11 | 2 1/4 | 5 1/2 | 5 1/2 | 2 1/4 |
| **SCHWEIZER 2-22** | 50 yd | 1 Gal | 5 1/2 | 5 1/2 | 7(2"), 1(3") | | 1(1/2") | 11 1/4 | 11 1/4 | 22 1/2 | 4 1/2 | 11 1/4 | 11 1/4 | 4 1/2 |
| **FRANKLIN GLIDER** | 45 yd | 1 Gal | 5 | 5 | 3(2") | | | 10 | 10 | 20 | 4 | 10 | 10 | 4 |
| **Ka 8b SAILPLANE** | 41 yd | 2 Qt | 4 1/2 | 4 1/2 | 1(1"), 5(2") | 1 | 1(1/2") | 9 1/4 | 9 1/4 | 18 1/2 | 3 3/4 | 9 1/4 | 9 1/4 | 3 3/4 |
| **WEIHE JS SAILPLANE** | 41 yd | 2 Qt | 4 1/2 | 4 1/2 | 1(1"), 5(2") | 1 | 1(1/2") | 9 1/4 | 9 1/4 | 18 1/2 | 3 3/4 | 9 1/4 | 9 1/4 | 3 3/4 |

## MISCELLANEOUS COVERING SUPPLIES

| | |
|---|---|
| Anti-Chafe Cloth Tape | Paint Strainer Cones |
| Brushes | Wetordry Sandpaper |
| Drain Grommets | Scotch-Brite Cleaning Pads |
| Seaplane Grommets | MEK Solvent for Cleaning |
| Rib Screws & Alum. Washers | Poly-Fiber 310 Alkaline Cleaner |
| Inspection Hole Reinforcing Rings | Randolph C-2210 Paint Surface Cleaner |
| Inspection Hole Covers | Epoxy Varnish for Wood Parts |
| Rib Lacing Needles | Epoxy Primer for Metal Parts |
| Curved Needles | High-Temp. Solvent-Resistant Masking Tape |

# Notes

# Notes

Copyright © 2008
Consolidated Aircraft Coatings
Ceconite Division
P.O. Box 3129
Riverside, CA 92519-3129
951-684-4280
Fax 951-684-0518
Toll Free 800-362-3490
ceconite.com
randolphaircraft.com